AGENDA
HAYES TOWNSHIP BOARD OF TRUSTEES
7:00p.m. June 12, 2023
Hayes Township Hall
9195 Major Douglas Sloan Road
Charlevoix, Michigan 49720

Join Zoom Meeting
https://us02web.zoom.us/j/88001640434?pwd=QkdkY3AzN1dmKzZpajZQNEkwMkZ5dz09

Meeting ID: 880 0164 0434
Passcode: 251468
+1 312 626 6799 US (Chicago)

1. Call to Order
2. Pledge of Allegiance
3. Review and Approval of Agenda
4. Public Comments
5. Approval of Regular Meeting Minutes of May 8, 2023 Regular Meeting Minutes and May 6, 2023 Budget Workshop
6. Treasurers Report
7. Clerks Report: Approval of Warrants
8. Reports: County Commissioner, Zoning Administrator, Planning Commission, Zoning Board of Appeals, Parks and Recreation, Trustee's, and Supervisor Reports.

NEW BUSINESS

9. 2023/2024 Budget Adoption and Salary Resolutions
10. Hayes Township Parking Lot Bids
11. Post Audit Policy
12. Hayes Township Park Pavilion
13. Public Comment
14. Board of Trustee Comment

ADJOURN MEETING

Public Comment at Meetings of the Hayes Township Board of Trustees

The Hayes Township Board of Trustees values public input and offers two opportunities for the public to comment at its meetings, once near the beginning and once near the end. This affords the Board of Trustees the opportunity to hear your views and remarks. If you speak, you should not expect to engage the Board of Trustee members or any staff in discussion or debate.

Board of Trustee members will not respond to comments made during the Public Comment unless it becomes necessary to ask a clarifying questions, correct a factual error, or to provide specific factual information.

Questions about Township matters are best directed to individual Board members or Township staff (Planner, Zoning Administrator, or Assessor) between meetings. Contact information is available on the township website at: hayestownshipmi.gov.

The availability of public comment is recognized by the Michigan Open Meetings Act. The Act provides that rules may be adopted for orderly comment from the public. To that end, the following rules have been established by the Board of Trustees:

1. A person wishing to speak will indicate on the sign in sheet that they would like to be called on at Public Comment. All persons in attendance in person will be called on first. Zoom attendees can indicate they would like to speak by raising their hand icon.
2. The person will begin by stating their name, spelling it out if requested.
3. The person addresses the Chairperson, or other person chairing the meeting, on behalf of the entire Board of Trustees. Public comment is NOT to be addressed to individual Board of Trustee members, to any township staff present, or to other members of the audience.
4. There is a three (3) minute time allotment for each speaker. The time limit may be extended by the Chairperson or majority of the Board of Trustee members present. A speaker may speak only once at each Public Comment. There is no provision for another audience member to 'donate' their three (3) minutes to another speaker.
5. A speaker will be out of order if the speaker disrupts the meeting, speaks longer than the allotted time, uses vulgarities or makes a personal attack on a Board of Trustee member or Township employee that is unrelated to the performance of that person's duties.
6. If a speaker is called out of order, that speaker will not be able to speak again at the same meeting except by special leave of the Board of Trustees
7. The Chairperson, or other person chairing the meeting, will have the discretion to permit members to speak at times other than the times reserved for Public Comment.

HAYES TOWNSHIP
BOARD OF TRUSTEES REGULAR MEETING
MAY 8TH , 2023 7:00 PM
HAYES TOWNSHIP HALL
09195 MAJOR DOUGLAS SLOAN RD
CHARLEVOIX, MICHIGAN 49720
ZOOM 849 2451 3210

The May 8th, 2023, meeting of the Hayes Township Board was called to order by Supervisor Ron VanZee at 7:00 pm.

Board members present were Matt Cunningham (Trustee), Julie Collard (Treasurer), Doug Kuebler (Trustee), April Hilton (Deputy Clerk/Recording Secretary), and Ron VanZee (Supervisor)
Excused: Kristin Baranski (Clerk)
Audience Members signed in: Luanne Kozma, Ellis Boal, Janet Simon, Roy Griffitts, Deb Narten, Kim Fary, Danielle Hutchenson, Tim Boyko, Carl Harmon, Betty Henne, Winnie Boal, Shelly VanWart, Melvin Czechowski, and Bob Adams.

CALL TO ORDER

Supervisor Ron VanZee called the meeting to order at 7:00 pm.

PLEDGE OF ALLEGIANCE

REVIEWED & APPROVED AGENDA

Mr. Kuebler made a motion, supported by Mr. Cunningham, to approve the agenda as presented.
Yays: Matt Cunningham, Julie Collard, Doug Kuebler, Ron VanZee
Nays: None Motion Carried

PUBLIC COMMENTS UNRELATED TO AGENDA ITEMS

Public comment opened and closed at 7:01.
Public comments included:

- Resident would like to thank the Township for their support in Bayshore, and believes the Township is making a difference. However, would like all parties involve with the original consent agreement to come together with a different agreement to protect the future of Bayshore.
- Resident stated they are concerned the Township struggles with completing FOIA request. Also feels some of information that requires a FOIA should be standard public information.

HAYES TOWNSHIP
BOARD OF TRUSTEES REGULAR MEETING
MAY 8TH , 2023 7:00 PM
HAYES TOWNSHIP HALL
09195 MAJOR DOUGLAS SLOAN RD
CHARLEVOIX, MICHIGAN 49720
ZOOM 849 2451 3210

- Resident supports previous resident's comments. Also stated the Zoning Administrator reports posted on the website still is not enough information.
- Resident reported on the process with his client's case against Rieth Riley's mineral extraction. Also included the response from the Townships Attorney towards the Townships roll in the case.
- Resident would like the Township to add old business and correspondence on the agenda.
- Resident informed the Township Board of another Resident's lawsuit against the Township withdrawal.

Closed at 7:20

APPROVAL OF APRIL 6TH 2023 BOT SPECIAL MEETING MINUTES:

Mr. Kuebler made a motion, supported by Mr. Cunningham to approve the April 6th, 2023, Board of Trustees special meeting minutes as presented.
Yeas: Julie Collard, Ron VanZee, Matt Cunningham, Doug Kuebler
Excused: Kristin Baranski
Nays: None **Motion Carried**

APPROVAL OF APRIL 10TH, 2023 BOT MINUTES

Mr. Kuebler made a motion, supported by Mr. Cunningham to approve the April 10th, 2023, Board of Trustees minutes as presented.
Yeas: Matt Cunningham, Julie Collard, Ron VanZee, Doug Kuebler
Nays: None **Motion Carried**

TREASURERS REPORT

Ms. Collard presented a written report reporting all Hayes Township account balances. Treasurer report is attached to minutes.

CLERKS REPORT: APPROVAL OF WARRANTS

Clerk, Ms. Collard, presented the warrants in the amount of $52,376.53.
Ms. Collard made a motion, supported by Mr. Kuebler, to approve Township warrants in the amount of $52,376.53. A roll call was taken.

Yeas: Matt Cunningham, Julie Collard, Ron VanZee, Doug Kuebler
Nays: None **Motion Carried**

COUNTY COMMISSIONER REPORT
Mr. Jess was not present.

PARKS AND REC. REPORT
Ms. Collard presented the Parks and Rec. Report, full report is available at the Township Hall. Next Parks and Rec. meeting will be held on June 5th, 2023. Welcome Back Becky and Greg!

PLANNING COMMISSION
Mr. Cunningham presented the Planning Commission Report. The next Planning Commission meeting is May 16th, 2023.

ZONNING BOARD OF APPEALS
Mr. Kuebler presented the Zoning Board of Appeals report regarding the meeting on May 24th, 2023, will not take place due to applicant withdrawing their application. There are no scheduled meetings.

ZONING ADMINISTRATOR REPORT
Ron VanZee presented a Zoning Administrator report.
Report available at the Hayes Township Hall.

SUPERVISOR REPORT: Ron VanZee presented a supervisor report.

ROAD BID REVIEW:
Ms. Collard made a motion, supported by Mr. Kuebler to accept Rieth Riley bid of $287592.00. Appointing Ron VanZee and Kristin Baranski to sign on behalf of the Township.
Yeas: Matt Cunningham, Julie Collard, Ron VanZee, Doug Kuebler
Nays: None **Motion Carried**

Ms. Collard made a motion, supported by Mr. Kuebler to approve the payment by the Township in the amount of $50,000 towards the Upper Bay Shore Road project.
Yeas: Matt Cunningham, Julie Collard, Ron VanZee, Doug Kuebler
Nays: None **Motion Carried**

HAYES TOWNSHIP PARK TREE MAINTENANCE BID REQUEST:
Mr. Kuebler made a motion, supported by Mr. Cunningham to approve posting the Hayes Township Park tree maintenance project out for bid by posting the project on the Township website and reaching out to local companies.
Yeas: Matt Cunningham, Julie Collard, Ron VanZee, Doug Kuebler
Nays: None **Motion Carried**

Ms. Collard made a motion, supported by Mr. Kuebler to accept the bid from B&G for lawn service at the Township Hall and Fire Barn.
Yeas: Matt Cunningham, Julie Collard, Ron VanZee, Doug Kuebler
Nays: None **Motion Carried**

LETTER OF ENGAGEMENT – HAYES TOWNSHIP EMS BUILDING ACCOUNTANT:
Mr. Cunningham made a motion, supported by M to accept the contract with Jeffrey Long for the evaluation of the EMS Building construction cost. Appointing Ron VanZee to sign on behalf of the Township.
Yeas: Matt Cunningham, Julie Collard, Ron VanZee, Doug Kuebler
Nays: None **Motion Carried**

SET BUDGET MEETING JUNE 12, 2023 AT 6:00PM:
Ms. Collard made a motion, supported by Mr. Kuebler to approve the Budget Meeting for June 12th, 2023 at 6:00 pm.
Yeas: Matt Cunningham, Julie Collard, Ron VanZee, Doug Kuebler
Nays: None **Motion Carried**

PUBLIC COMMENTS: Public comments opened at 7:50 pm.
Comments included

- Resident asked the board to explain the need for the accountant to review the EMS Building construction cost.

- Resident asked if Rieth Riley actively working on Hayes Township roads alters the Township views on the mineral extraction in Bay Shore.
- Resident asked for an update on the Township's audit with the State of Michigan.
- Resident appreciates the update of the Zoom link located on the Calendar, however, would like to see the link on the PDF posted.
- Resident supports having Old Business on the meeting agendas. Would also like the Board to respond to public comment during the Board Member Comments portion of the meeting. Stated the are interested to see the 2023 Township Budget.
- Resident states they will continue FOIA request. Also asked the Board to explain the grant requesting process.
- Resident would like to know the expense and income for the Pickle Ball courts at Hayes Township Park.
- Resident does not agree the Township is violating any rules with not having the Zoom link on the PDF. Also believes the Township should continue listening to the Townships legal counsel.

Public comments closed at 8:07 p.m.

BOARD COMMENT:

Ms. Collard responded to the comments regarding the Pickle Ball Court Grant. The Board approved the grant submission to the DNR. Also explained the Grant submission process.

ADJOURNMENT: Mr. Kuebler made a motion, supported by Mr. Cunningham, to adjourn at
8:09 p.m.
Yeas: Matt Cunningham, Julie Collard, Ron VanZee, Doug Kuebler
Nays: None **Motion Carried**

Respectfully Submitted,

April Hilton
Hayes Township Deputy Clerk/Recording Secretary

Hayes Township Board of Trustees

Budget Work Meeting Minutes

May 6, 2023

The budget work meeting of the Hayes Township Board was called to order by Supervisor VanZee at 10:30 am.

Board members present were Julie Collard (Treasurer), Kristin Baranski (Clerk) and Ron VanZee (Supervisor).

Ms. Baranski presented the "draft" budget worksheets for Hayes Township.

The Township is fiscally healthy.

Priorities: Start planning on updates at Township Hall

MUST continue to contribute to road fund

Plan and accommodate for Spring Clean

Continue to be fiscally responsible with tax payer monies

Respectfully Submitted by:

Kristin Baranski

Hayes Township Clerk

June 2023 Treasurer Report

(As of June 5, 2023)

Charlevoix State Bank

1.General Fund-$673,933.00

($463,933.00 available, $210,000 Recommended Reserve)

2. Tax Account-*$5,000.00* *(restricted Treasury Funds)*

3. Township Warrant Checking-$21,146.47

4. Pantry-$7,430.47

5.ARPA (restricted funds)-$199,331.31

6.Fundraising Account-$2,719.60

Forefront

7.Metro Account Revenue Sharing-$66,482.18

8.Prime Share Account-$134.65

Horizon Bank

9.Road Fund (RESTRICTED ROAD FUNDS)-$369,584.31

HAYES TOWNSHIP
ZONING ADMINISTRATOR REPORT
JUNE 2023

Issued zoning permit for a 4' X 17.2' residential addition connecting house to garage at 10330 Boyne City Road.

Issued zoning permit for a new single family residence at 06310 Michigan Shores Drive.

Issued zoning permit for a road sign at 11399 Boyne City Road .

Issued zoning permit for a new single family residence at 07778 Pincherry Road.

Issued zoning permit for an attached deck at 06227 Brown Road.

Issued zoning permit for a 52' x 60' accessory structure as approved by special use permit at 07889 Boyne City Road

Received and reviewing application for zoning permit for removal of existing residence and construction of a new single family residence. Shoreland review committee scheduled for review.

Received and reviewing application for new single family residence at 11667 Pa Ba Shan Trail. Shoreland review committee has inspected site.

Wrote second letter of nuisance violations to owners of property located at 09888 Major Douglas Sloan Road.

ESTIMATE

9790 S. M 37 · Buckley, MI 49620
(231) 944.9644

pictureperfectasphalt@gmail.com
www.pictureperfectasphalttraversecity.com

Billing Name: Hayes Township Hall		
Address: 9195 Major Douglas Sloan Rd Charlevoix, MI 49720		
Phone #: 231-330-8396	Email: Scott@ironwood.BZ	
Contact: Scott Wilhelmi	Job #:	Date: 01/13/23

We hereby submit specifications and estimate for COMMERCIAL / RESIDENTIAL asphalt driveway:

1.) Seal Coat:

Contractor is to edge overgrown grass on the sides of the asphalt, to thoroughly clean, before applying a protective coat of commercial sealant mixed with silica sand. This will improve traction and durability. Additionally, we add diamond shield fortifier to aid in curing harder and faster, while leaving a deeper black finish.

Total square feet 8638

SUB TOTAL $ 1250.00

2.) Hot Pour Crack Sealant:

Contractor is to clean by traditional methods or the use of a 2200 degree crack jet to dry, clean, and etch the sidewalls for maximum bonding. Picture Perfect uses a heavy duty, commercial grade rubber sealant, melted down and applied to detour water invasion.

Total linear feet 242

SUB TOTAL $ 240.00

3.) Asphalt Repair:

Contractor is to saw cut or infrared damaged area. The infrared process uses an infrared heating unit to heat the asphalt, softening it to a workable state, then the old material is removed with new being added, which fuses seamlessly for a watertight bond.

Total square feet Approximate 225 sq ft per customer
Contractor located 263 sq ft

SUB TOTAL $ 1700.00

4.) Striping:

Contractor is to clean before marking out the lines to ensure proper adhesion. Picture Perfect uses an airless striping machine for uniform lines, spraying the appropriate material for the scope of each project.

2 Handicap by cement pads meeting ADA requirements
13 spaces (yellow)

SUB TOTAL $ 400.00

Final payment is to be made upon completion. 18% per annum will be charged on past due invoices over 30 days.
Down payment is required based on scope of work. Item #3)asphalt repair) is to be paid in full before item #1 (seal coat) and item #2 (hot pour crack sealant) can be performed.

All material is guaranteed to be as specified. All work to be completed in a workman like manner according to standard practices. Any alteration or deviation from the above specifications involving extra costs will become an extra charge over and above the estimate. All agreements contingent upon strikes, accidents or delays beyond our control. Owner to carry fire, tornado and other necessary insurance. Our workers are fully covered by workman's compensation insurance.

GRAND TOTAL $ 3590.00

Estimator: Kim Schaub

Cell: 944-9644

Acceptance of this Estimate - The above prices, specifications and conditions are satisfactory and are hereby accepted. You are authorized to do the work as specified. Payment will be made outlined above.

Customer Signature: _____ Date: _____

"When only picture perfect will do!"

Hayes Illinois

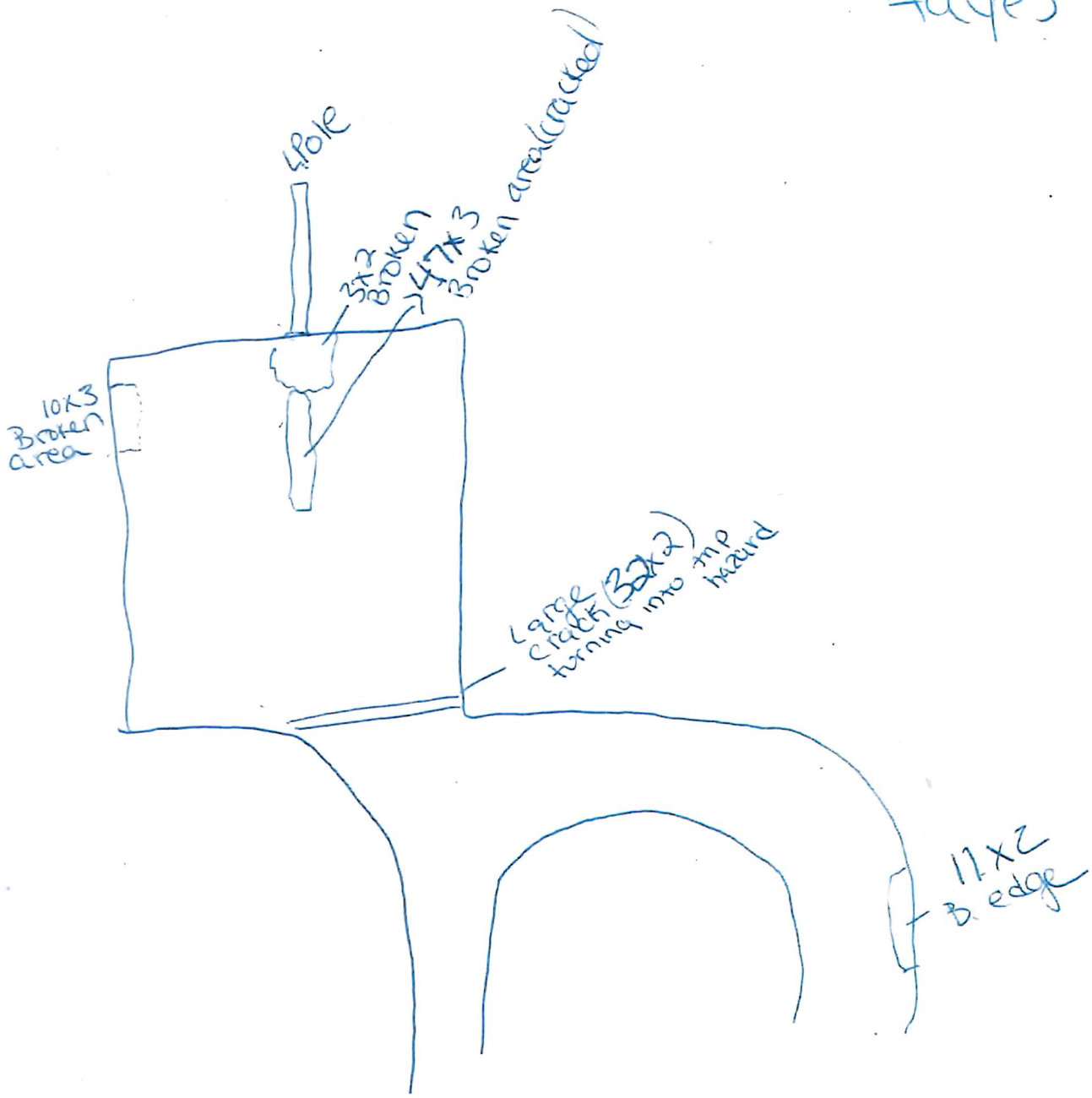

ESTIMATE

Northern Michigan Asphalt Repair, LLC
2833 Sunnyridge Rd.
Alanson, MI 49706
(231) 674-7088

Repairing Northern Michigan's potholes one at a time!

Ironwood Construction Co.
3250 Woods Way
Petoskey, MI 49770
C/O Scott Wilheli
scott@ironwood.bz

Date
01-21-2023

Description	**Price**
Service for: Hayes Township Hall 9195 Major Douglas Sloan Rd. Charlevoix	
all cracks 3/8 inch and wider to be throughly cleaned and filled with hot rubber crack fill to help prevent further water damage	$500
Area to be thoroughly cleaned and then sprayed with a mixture of asphalt sealer and sand (to prevent slipping and give greater durability) that is environmentally friendly, water-based low VOC's, pet-safe & low odor	$1450
Line Striping for 15 standard parking stalls, 2 handicapped stalls with two toned symbols, handicapped access aisle at rear sidewalk entrance	$450
Three areas to be sawcut, removed & replaced with new asphalt (approx. 225 square feet)	$1400
~THIS ESTIMATE IS GOOD FOR 30 DAYS~	
Total:	**$3800**

20% of total cost is needed to reserve your spot in our 2023 schedule in the amount of $760. Please note, this estimate is

Note: This estimate is not a contract or a bill. It is our best guess at the total price to complete the work stated above, based on our initial inspection.

based on the current material prices and is subject to change in the spring, based on those prices.

Note: This estimate is not a contract or a bill. It is our best guess at the total price to complete the work stated above, based on our initial inspection.

ASPHALT MAINTENANCE SERVICE

13106 MAPLE WAY
CHARLEVOIX, MICHIGAN 49720
(231) 547-6636

PROPOSAL AND ACCEPTANCE

"THE PAVEMENT PROFESSIONALS"

PROPOSAL SUBMITTED TO: Ron VanZee		PHONE: 497-4701	DATE: 5-18-23
STREET		JOB NAME: Hayes Twp Hall	
CITY, STATE AND ZIP CODE		JOB LOCATION	
ARCHITECT	DATE OF PLANS		JOB PHONE

We hereby submit specifications and estimates for:

1. Power clean all asphalt
2. Clean & hot crack fill cracks
3. Hot mix asphalt infrared repair at various locations on parking lot
4. Seal all asphalt w/ Gem Seal refined coal tar based sealer modifier, mix & applied to manufactures specs.

We Propose hereby to furnish material and labor — complete in accordance with above specifications, for the sum of:

Four Thousand, Nine Hundred twenty dollars ($ 4,920.00).

Payment to be made as follows:

Payment in Full upon completion

All material is guaranteed to be as specified. All work to be completed in a workmanlike manner according to standard practices. Any alteration or deviation from above specifications involving extra costs will be executed only upon written orders, and will become an extra charge over and above the estimate. All agreements contingent upon strikes, accidents or delays beyond our control. Owner to carry fire, tornado and other necessary insurance. Our workers are fully covered by Workmen's Compensation Insurance.

Authorized Signature: Tom Marlow

Note: This proposal may be withdrawn by us if not accepted within _____ days.

Acceptance of Proposal - The above prices, specifications and conditions are satisfactory and are hereby accepted. You are authorized to do the work as specified. Payment will be made as outlined above.

Signature _____

Date of Acceptance _____ Signature _____

FAMILY Farm&Home

We're open to serve you Monday - Saturday: 8am - 8pm & Sunday 9am - 7pm

Ariens

Ariens IKON Zero Turn Mower 52 in. 918005

Write a review

SKU# 867715

$3779.99

~~**$3,999.99**~~

In Stock at **Charlevoix** today (change store)

Online price. In-store price and availability may vary.

Quantity: – 1 +

Add to Cart

☐ **In Stores/Curbside Pickup**
FREE!

FREE $200 Gift Card with in-store purchase
Offer available in-store only. Learn more

Durability and power meet function and flexibility.

Learn More ›

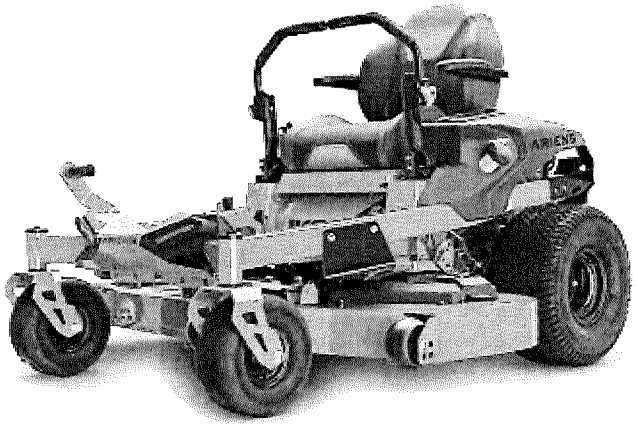

Product Details

Durability and power meet function and flexibility.

Built to take whatever your yard dishes out. Its solid tubular frame delivers rugged support while its plush high-back seat and premium steering grips keep you comfortable while mowing even the biggest lawns.

Features & Benefits

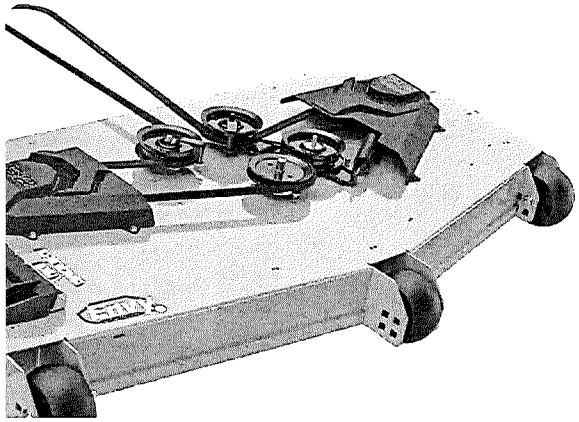

ENVY™ ELITE CUTTING SYSTEM DECK

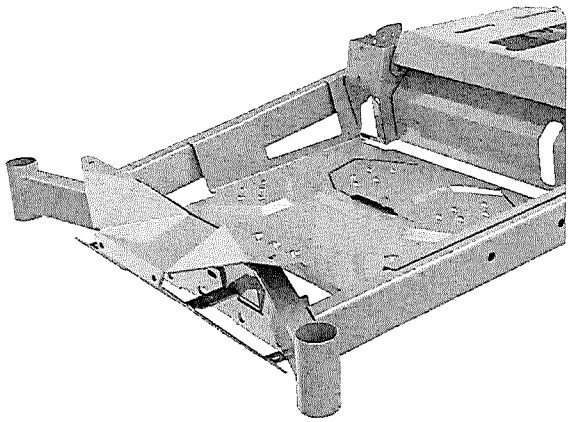

ONE-PIECE, FULLY WELDED TUBULAR CHASSIS

11-gauge fabricated ENVY™ ELITE CUTTING SYSTEM deck is 4 1/2" deep and designed for optimized airflow.

Influenced by our commercial applications, this all-new chassis displays strength and durability with

+ Show More Features

Documentation/Additional Resources (PDFs)

More about the Ikon Series

- Ikon Series Details

Watch More:

Ariens® IKON Zero-Turn

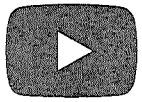

Specifications

Brand	Ariens
Sub Brand	IKON
Model Number	918005
Cutting Width	52 in.

Manufacturer Number	918005
Product Availability	In Stores/Curbside Pickup

Additional Information

Online price. In-store price and availability may vary.

Receive a FREE $200 Family Farm & Home gift card with the purchase of this mower (867715). Offer available in stores only. Not valid on previous purchases. Family Farm & Home gift card valid towards future purchases only. Offer available through 6/18/23.

Write a Review

You're reviewing: Ariens IKON Zero Turn Mower 52 in. 918005

Your Rating *

☆ ☆ ☆ ☆ ☆

Nickname *

Summary *

Your Review *

I'm not a robot

reCAPTCHA
Privacy - Terms

Submit Review

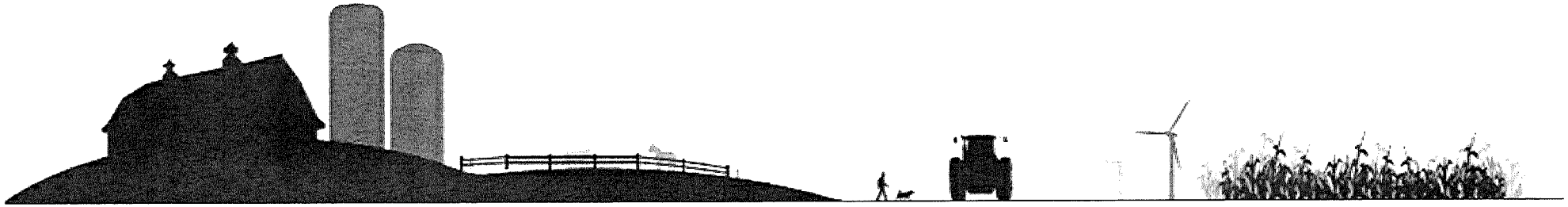

Be the first to know!

Get all of the latest information on events, sales, and offers. Sign up for our newsletter today!

Please enter your

Join Now

#FamilyFarmAndHome

Shopping Online

More Ways To Shop

Gift Cards

FFH Credit Card

Customer Service

FAMILY Farm&Home

We're open to serve you Monday - Saturday: 8am - 8pm & Sunday 9am - 7pm

Home > Husqvarna Zero Turn Mower 54 in. Kawasaki Z254F SE

Husqvarna Zero Turn Mower 54 in. Kawasaki Z254F SE is the only product matching your '862895' search.

Husqvarna

Husqvarna Zero Turn Mower 54 in. Kawasaki Z254F SE

★★★★☆ (1) Write a review

SKU# 862895

$3,349.99

~~$3,499.99~~

In Stock at **Charlevoix** today (change store)

Online price. In-store price and availability may vary.

Quantity: − 1 +

Add to Cart

☐ **In Stores/Curbside Pickup**
FREE!

FREE $200 Gift Card with in-store purchase
Offer available in-store only. Learn more

Performance and style hit the grass running with Husqvarna Z200 series zero-turn mowers.

Learn More ›

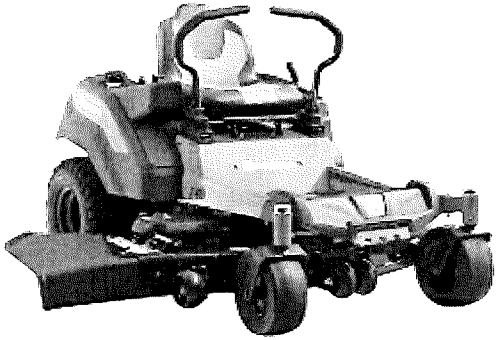

Product Details

Performance and style hit the grass running with Husqvarna Z200 series zero-turn mowers. Our ClearCut™ fabricated deck was designed for superior cutting performance, with top-quality blades and an aerodynamic design. And you'll stay comfortable, no matter how long the job takes, thanks to the ventilated seat and LED headlights for increased visibility.

Features & Benefits

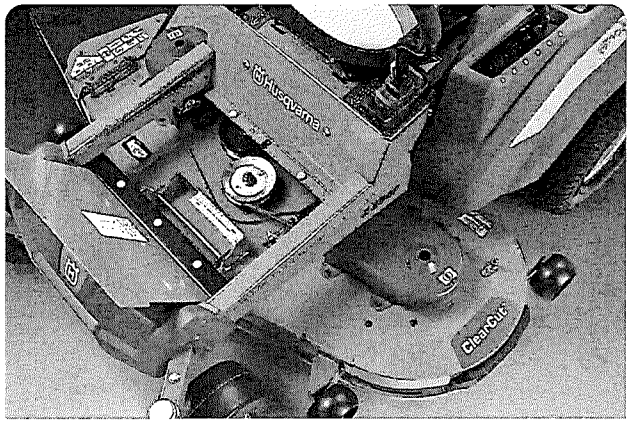

ClearCut™ Fabricated Deck

Specially-designed 54 in. deck built for superior cutting performance whether discharging, bagging or mulching.

Ultra-Durable Frame

Rugged frame and wheels ensure durability and long-lasting performance.

+ Show More Features

Specifications

Brand	Husqvarna
Model Number	Z254F SE
Engine Make	Kawasaki
Cutting Width	54 in.
Manufacturer Number	967954006
Product Availability	In Stores/Curbside Pickup

Additional Information

Online price. In-store price and availability may vary.

Receive a FREE $200 Family Farm & Home gift card with the purchase of this mower (862895). Offer available in stores only. Not valid on previous purchases. Family Farm & Home gift card valid towards future purchases only. Offer available through 6/18/23.

Customer Reviews

★★★★☆ **Easy**

This is one of the first zero turns I tried. Easily driven, have never cut a lawn with one.
Review by Michelle 3/27/23

Write a Review

You're reviewing: Husqvarna Zero Turn Mower 54 in. Kawasaki Z254F SE

Your Rating *

☆ ☆ ☆ ☆ ☆

Nickname *

Summary *

Your Review *

I'm not a robot

reCAPTCHA
Privacy - Terms

Submit Review

Be the first to know!

Get all of the latest information on events, sales, and offers. Sign up for our newsletter today!

Please enter your

Join Now

#FamilyFarmAndHome

Shopping Online

More Ways To Shop

Gift Cards

FFH Credit Card

Customer Service

Expenditure approval & Post Audit Policy

The board is required at each regular meeting to audit all claims against the township presented for payment and authorize the payment of all allowed claims. Payments authorized by the township board shall be paid by the treasurer on an order signed by the township clerk. Accounts approved shall be filed and preserved by the township clerk. (MCL 41.75)

Each board member must have the opportunity—and use it—to review ("audit") the documentation for any payment prior to voting to approve it. Board members should look for proper authorization for the expenditure, including board votes to authorize the actual expenditure (not simply inclusion of the item in the budget), original bills or purchase orders with purchase officer approval, receipts or logs for reimbursement, receipts for credit card statement items, correct Chart of Accounts numbers, and payee information.

Every payment of any kind (including payroll) leaving the township—with the sole exception of the current-year tax collection disbursement account—must be voted on by the board **before** being disbursed, unless the township has a written board-adopted "post-audit" policy to authorize certain specific payments to be made by the clerk and treasurer between board meetings.

A post-audit policy states that the board will allow certain limited, specific, routine payments to be made prior to the board voting on them to avoid the township having late penalties—like the hall utilities and payroll. The township board must still vote to approve all those payments at the next meeting.

It does not matter whether the payments are made on actual checks or electronically. Before a "hard copy" check or electronic payment is issued, the clerk must sign each check or payment to show that the board has either already voted to authorize that specific payment or, per the post-audit policy, that the payment is being issued in accordance with the policy.

Without such a policy, no claims should be paid prior to board authorization at a board meeting.

All claims shall be approved by the township board prior to payment, except the following:

1) Payroll (election workers, sexton wages, etc.)
2) Utility bills (phone, electric, fuel, etc.)
3) Invoices with penalties or discounts that would be incurred if payment is not received prior to the board meeting where claims will be approved (identify specifically)

These claims shall be post-audited at the next board meeting following their issuance. (For example, your payment schedule would indicate Vouchers 101 to 104 were preauthorized by policy and approval by the board that evening.)

The (supervisor/other official) may authorize emergency expenditures when deemed essential due to the imminent threat to the health, safety and welfare of the township.

ADOPTED BY HAYES TOWNSHIP BOARD OF TRUSTEES ON JUNE 12, 2023

KRISTIN BARANSKI
HAYES TOWNSHIP CLERK

HAYES TOWNSHIP
BUDGET MEETING
JUNE 12, 2023 6:00 PM
HAYES TOWNSHIP HALL
09195 MAJOR DOUGLAS SLOAN RD
CHARLEVOIX, MICHIGAN 49720
ZOOM ID: 828 1953 6871

The June 12th, 2023, meeting of the Hayes Township Board was called to order by Supervisor Ron VanZee at 6:00 pm.

Board members present were Matt Cunningham (Trustee), Julie Collard (Treasurer), Doug Kuebler (Trustee), Kristin Baranski (Clerk), April Hilton (Deputy Clerk/Recording Secretary), and Ron VanZee (Supervisor)
Audience Members signed in: Ellis Boal, LuAnne Kozma, Tim Boyko, Betty Henne, Danielle Hutchenson, Deb Narten.

CALL TO ORDER

Supervisor Ron VanZee called the meeting to order at 6:00 pm.

PLEDGE OF ALLEGIANCE

REVIEWED & APPROVED AGENDA

Mr. Kuebler made a motion, supported by Ms. Baranski, to approve the agenda as presented.
Yays: Matt Cunningham, Julie Collard, Doug Kuebler, Kristin Baranski, Ron VanZee
Nays: None Motion Carried

PUBLIC COMMENTS UNRELATED TO AGENDA ITEMS

Public comment opened at 6:02.
Public comments included:

- Resident is concerned the public was not properly notified of the Budget Workshop. And request the board to reschedule a new Budget Workshop and new Budget Hearing.
- Resident does not want to receive the Hayes Township Voice.

Closed at 6:06

PRESENTATION OF THE 2023/2024 HAYES TOWNSHIP BUDGET:

The Board of Trustee came to a census for the 2023/2024 Hayes Township Budget.

HAYES TOWNSHIP
BUDGET MEETING
JUNE 12, 2023 6:00 PM
HAYES TOWNSHIP HALL
09195 MAJOR DOUGLAS SLOAN RD
CHARLEVOIX, MICHIGAN 49720
ZOOM ID: 828 1953 6871

PUBLIC COMMENTS: Public comments opened at 6:13 pm.

- Resident stated again how they do not feel the Budget Workshop was publicly notified correctly. Stated 18 hours posted on the front of the building was not enough notice and feels it should have been stated in the Hayes Township Voice. Stated concerned the Zoning Administrator had an increase in pay, Board corrected them the amounts have not changed.
- Resident stated the public should approve and disapprove the salary increases of township employees.
- Resident stated they have received emails of the Townships scheduled meeting, however, did not see it on an email or the website.
- Resident questioned the cost of the Voice for the 2023/2024 budget. As well as their concern for broken rock removal at Hayes Township Park.

Public comments closed at 6:23 p.m.

ADJOURNMENT: Mr. Kuebler made a motion, supported by Mr. Cunningham, to adjourn at
6:23 p.m.
Yeas: Matt Cunningham, Julie Collard, Ron VanZee, Kristin Baranski, Doug Kuebler
Nays: None **Motion Carried**

Respectfully Submitted,

April Hilton
Hayes Township Deputy Clerk/Recording Secretary

HAYES TOWNSHIP BOARD OF TRUSTEES MEETING

Meeting Date:	JUNE 12TH, 2023	**Location:**	Hayes Township Hall

Name	Would you like to be called on to speak during public comment?	
Lu Anne Kozma	YES	NO
DEB NAKTEN	YES	NO
GERRY MILLS	YES	NO
R. J. Jess	YES	NO
Lee Hutchesson	YES	NO
Leslie Cunningham	YES	NO
Jane Simon	YES	NO
[illegible]	YES	NO
	YES	NO
	YES	NO
	YES	NO
	YES	NO
	YES	NO
	YES	NO
	YES	NO
	YES	NO
	YES	NO
	YES	NO
	YES	NO
	YES	NO