ZONING BOARD OF APPEALS
PUBLIC HEARING
HAYES TOWNSHIP
9195 MAJOR DOUGLAS SLOAN ROAD
CHARLEVOIX, MICHIGAN 49720
SEPTEMBER 18, 2024
7:00 PM
AGENDA

Join Zoom Meeting
https://us02web.zoom.us/j/83141540092?pwd=8B9u2ffX3izb5t85jekpgxyEjDjsre.1

Meeting ID: 831 4154 0092
Passcode: 396667

1. Chair calls meeting to order
2. Pledge of Allegiance
3. Introduction of Zoning Board Members
4. Declaration of Conflict of Interest
5. Approval of August 27, 2024 meeting minutes
6. Public Comment- Non Agenda Items
7. Chair Opens Public Hearing
   a) Zoning Administrator introduces case and presents exhibits
   b) Petitioner is recognized (and/or Agent) and puts forth case
   c) Board Members report on their site inspections, if any, and ask questions they may have of Petitioner (and/or Agent). At this time discussion may take place between Petitioner and Board Members
   d) Chair opens Public Comment
   e) Correspondence acknowledged
   f) Chair closes Public Comment
   g) Review of appliciable Section of Hayes Township Ordinance
   h) Review and discussion of Finding of Fact
   i) Motion and Roll Call Vote
8. Chair Closes Public Hearing
9. Zoning Board of Appeals Member Comment
10. Adjournment

Public Comment at Meetings of Hayes Township Zoning Board of Appeals

The Hayes Township Zoning Board of Appeals values public input and offers two opportunities for public comment near the beginning and end of its meetings. If you speak, however, you should not expect to engage board members or staff in discussion or debate.

ZBA members will nor respond to comments made during public comment except to ask a clarifying question, correct an error, or provide specific factual information.

Public comment is recognized by the Michigan Open Meetings Act. The Act allows public bodies to adopt rules for orderly comment. To that end, the following rules have been adopted by the Hayes Township Zoning Board of Appeals:

1. A person wishing to speak will so indicate on the sign in sheet. Zoom attendees can indicate they would like to speak by raising their hand icon. Individuals attending in person will be called on first.

2. The person will begin by stating their name, spelling it if requested.

3. The speaker addresses the Chairperson, or other person chairing the meeting, on behalf of the entire board. Public comment should not be addressed to individual ZBA members or township staff, or to other members of the audience.

4. There is a three (3) minute time allotment for each speaker. The time limit may be extended by the Chairperson or majority of the board. A person may only speak once during a comment period. Audience members may not 'donate' their time to another speaker.

5. A speaker will be out of order if s/he is disruptive, speaks longer than the allotted time, uses vulgarities or makes a personal attack on a ZBA member or township employee that is unrelated to the performance of that person's duties.

6. A speaker ruled out of order will not be allowed to speak again at the same meeting except by special permission of the board.

7. The chair has the discretion to permit audience members to speak at times other than during public comment.

DRAFT

Hayes Township

Zoning Board of Appeals

Administrative Meeting Minutes

August 27th, 2024

09195 Old U.S. N, Charlevoix, MI 49720

The August 27th, 2024, organizational meeting of the Hayes Township Zoning Board of Appeals was called to order by Chairman Janice Vedder-Whipple at 10:00 am. at the Hayes Township Hall, 09195 Old US 31 N., Charlevoix, MI 49720.

BOARD MEMBERS PRESENT: Rod Slocum, Bruce Deckinga, Janice Vender-Whipple, Rex Greenslade and Doug Kuebler.

BOARD MEMBERS ABSENT: Joni Hosler (Alternate)

ALSO PRESENT: April Hilton (Recording Secretary/Deputy Clerk)

Audience:

PLEDGE OF ALLEGIANCE: Ms. Vedder-Whipple (Chair) opened the meeting at 10:00 am with the Pledge of Allegiance to the Flag.

PUBLIC COMMENT:

Public Comment Opened at 10:09am none.

Public Comment Closed at 10:09 am

INTRODUCTION OF ZONING BOARD OF APPEALS (ZBA) MEMBERS:

BOARD MEMBERS PRESENT: Rod Slocum, Bruce Deckinga, Janice Vender-Whipple, Rex Greenslade and Doug Kuebler.

BOARD MEMBERS ABSENT: Joni Hosler (Alternate)

REVIEWED AGENDA:

Mr. Kuebler made a motion, supported by Mr. Greenslade, to approve the agenda.

Yeas: Rod Slocum, Bruce Deckinga, Doug Kuebler, and Rex Greenslade, Janice Vender-Whipple.

Nays: None **Motion Carried**

APPROVAL OF DRAFT MINUTES FROM JANUARY 24TH, 2024:

Mr. Slocum made a motion, supported by Mr. Deckinga, to approve the January 24th 2024 meeting minutes as amended.

Yeas: Rod Slocum, Bruce Deckinga, Doug Kuebler, Rex Greenslade and Janice Vender-Whipple.

Nays: None **Motion Carried**

DRAFT

Hayes Township

Zoning Board of Appeals

Administrative Meeting Minutes

August 27th, 2024

09195 Old U.S. N, Charlevoix, MI 49720

NEW BUSINESS

AGENDA GUIDELINE DISCUSSION:

The ZBA came to a consensus to allow one pubic comment at the beginning of the meeting with a 3 minute limit.

The ZBA came to a consensus to accept the agenda guidelines as discussed for ZBA Meeting Guidelines found on the back of each meeting agenda.

SET PUBLIC HEARING FOR VARIANCE REQUEST:

Mr. Deckinga made a motion, supported by Mr. Greenslade to set a public hearing date for a variance request on September 18th 2024 at 7:00pm.

Yeas: Rod Slocum, Bruce Deckinga, Doug Kuebler, Rex Greenslade, and Janice Vender-Whipple.

Nays: None **Motion Carried**

Mr. Greenslade made a motion, supported by Mr. Deckinga to hear cases either on the 2nd or 4th Wednesday of each month at 7:00pm.

Yeas: Rod Slocum, Bruce Deckinga, Doug Kuebler, Rex Greenslade, and Janice Vender-Whipple.

Nays: None **Motion Carried**

PUBLIC COMMENT:

Public comments opened at 11:15am

none

Public Comments closed at 11:15am

ZBA COMMENT:

Mr. Greenslade stated he completed a very good 8 hour training session through the state of Michigan.

ADJOURNMENT: Mr. Deckinga made a motion, supported by Mr. Kuebler, to adjourn at 12:00 p.m.

Yeas: Rod Slocum, Bruce Deckinga, Doug Kuebler, Rex Greenslade, and Janice Vender-Whipple.

Nays: None **Motion Carried**

Respectfully Submitted,

April Hilton

Hayes Township Deputy Clerk/Recording Secretary

Hayes Township
Zoning Variance Application
Zoning Administrator Phone (231) 497-9360

GENERAL INFORMATION

Name of Property Owner(s) Little Traverse Conservancy

Mailing Address 3264 Powell Rd

City Harbor Springs State MI Zip 49740

Telephone 231-347-0991

PROPERTY INFORMATION

Property Tax Code Number: 15- 007- 101 - 002 - 00

Legal Address 6413 DIVISION AVE

Nearest Road Intersection Division/Maple

Zone District agriculture

Please type or print; fill in all blanks and return with **$700.00** fee payable to Hayes Township

VARIANCE OR INTERPRETATION REQUESTED

Relief from the following Zoning Ordinance Section(s)
Section: 3.14 Waterfront Regulations

Please review the online copy of the zoning ordinance for the exact section number.
charlevoixcounty.org/hayes.asp

Submit an exact scaled drawing on the reverse side of this document or on a separate sheet of paper showing

- lot location (road names, lakeshore, streams, easements, rights-of-ways, unusual topographic features),
- lot dimensions,
- location and dimensions (including height) of existing and proposed structure(s),
- distance between structure(s) and front, rear, and sides lot lines,
- location of driveway giving distance to nearest side lot line,
- locations of well, septic tank and drain field,
- other structures and uses within 100 feet of the property.

Note: Applicant must supply exact maps, drawings, etc. in order to inform the Zoning Board of Appeals of the type of building or activity, and how it will look when desired construction is completed.

Describe reason for requested variance, including exact size and type of variance needed:
The requested variance is to construct a 16ft x 20ft viewing platform with a stairway leading down to the Lake Michigan shoreline, along with associated signage and an 8ft wide crushed gravel turnpike path. The platform will be built within the wood line along the shoreline, starting at grade and extending 16ft towards the shoreline, with a maximum height of approximately 7ft above ground level. This variance is part of a larger project to build an accessible trail on the property. The project aims to replace an existing, highly eroded path with a safe and stable structure, enhancing shoreline access for people with mobility disabilities and effectively managing erosion. The new trail and platform will be open to the public.

Describe the practical difficulty that exists. What are the unique conditions of your situation?
The practical difficulty is that we are seeking to provide access to a view of Lake Michigan to anyone including people that use wheelchairs, strollers or other mobility assistance devices and we are limited in where we can build a viewing platform. The steep slope and natural terrain of the property, compounded by an existing eroded path that makes access to the shoreline difficult and hazardous. The unique condition is the likelihood for this trail and structure to become a popular destination and we want to be able to account for multiple groups of people at one time. We want to size the structure appropriately and we deem the existing ordinance limit for structures such as this as being too small for our needs. People will be congregating at this structure, possibly with bulky items like wheelchairs and strollers, we need a larger sized platform to account for this scenario.

Effect on applicant if variance is denied.
What specific problem(s) would be created for you, as applicant, if your request is not granted? What rights that others enjoy, will you be denied if this variance is denied?

If the variance is denied, it would prevent us from providing what we deem to be an adequate sized viewing platform. Our wonderful crushed gravel accessible pathway would end at undersized viewing platform. At this time we are not creating an Universally Accessible way down to the water, so this viewing platform is the final destination where guests will want to hang around for a little while. This would deny the public, as guests to the preserve, the same level of accessibility and recreational use that other property owners in the area enjoy. Without the platform, the erosion issue would remain unaddressed. Denial of the variance would also hinder the larger project to build an accessible trail on the property, limiting its overall benefits.

Effect of requested variance on other properties.
If your variance request is granted, what effect will it have on the area? Does your request represent a change in the types of uses permitted? Will it hamper access by emergency vehicles or personnel? Will it restrict light, air, or access to adjacent properties? Will it in any other way create problems or concerns to other properties in the area?

Describe reason for requested variance, including exact size and type of variance needed:
The requested variance is to construct a 16ft x 20ft viewing platform with a stairway leading down to the Lake Michigan shoreline, along with associated signage and an 8ft wide crushed gravel turnpike path. The platform will be built within the wood line along the shoreline, starting at grade and extending 16ft towards the shoreline, with a maximum height of approximately 7ft above ground level. This variance is part of a larger project to build an accessible trail on the property. The project aims to replace an existing, highly eroded path with a safe and stable structure, enhancing shoreline access for people with mobility disabilities and effectively managing erosion. The new trail and platform will be open to the public.

Impact on Property:

The platform will have a limited impact on the overall property, which spans 65 acres and includes 1,400 feet of shoreline. The careful placement and design of the platform and trail ensure minimal disruption to the natural landscape while providing essential accessibility improvements.

Describe the practical difficulty that exists. What are the unique conditions of your situation?
The practical difficulty is that we are seeking to provide access to a view of Lake Michigan to anyone including people that use wheelchairs, strollers or other mobility assistance devices and we are limited in where we can build a viewing platform. The steep slope and natural terrain of the property, compounded by an existing eroded path that makes access to the shoreline difficult and hazardous. The unique condition is the likelihood for this trail and structure to become a popular destination and we want to be able to account for multiple groups of people at one time. We want to size the structure appropriately and we deem the existing ordinance limit for structures such as this as being too small for our needs. People will be congregating at this structure, possibly with bulky items like wheelchairs and strollers, we need a larger sized platform to account for this scenario.

Effect on applicant if variance is denied.
What specific problem(s) would be created for you, as applicant, if your request is not granted? What rights that others enjoy, will you be denied if this variance is denied?

If the variance is denied, it would prevent us from providing what we deem to be an adequate sized viewing platform. Our wonderful crushed gravel accessible pathway would end at undersized viewing platform. At this time we are not creating an Universally Accessible way down to the water, so this viewing platform is the final destination where guests will want to hang around for a little while. This would deny the public, as guests to the preserve, the same level of accessibility and recreational use that other property owners in the area enjoy. Without the platform, the erosion issue would remain unaddressed. Denial of the variance would also hinder the larger project to build an accessible trail on the property, limiting its overall benefits.

Effect of requested variance on other properties.

Granting this variance will have minimal impact on the area. The proposed viewing platform, stairway, gravel trail, and signage will not change the types of uses permitted in the zoning district. It will not hamper access by emergency vehicles or personnel, nor will it restrict light, air, or access to adjacent properties. The structure and trail are designed to blend with the natural environment and will be built with materials that minimize visual and environmental impact, ensuring it does not create problems or concerns for neighboring properties. Moreover, by replacing the eroded path, the variance will help manage erosion and improve the overall safety and aesthetic quality of the area. It will also funnel visitors to a defined area so as to reduce the likelihood of people wonder off the preserve an onto neighboring properties. Making the platform and trail open to the public will enhance community access and enjoyment of the Lake Michigan shoreline. Additionally, this variance supports the larger project to build an accessible trail on the property, further benefiting the community.

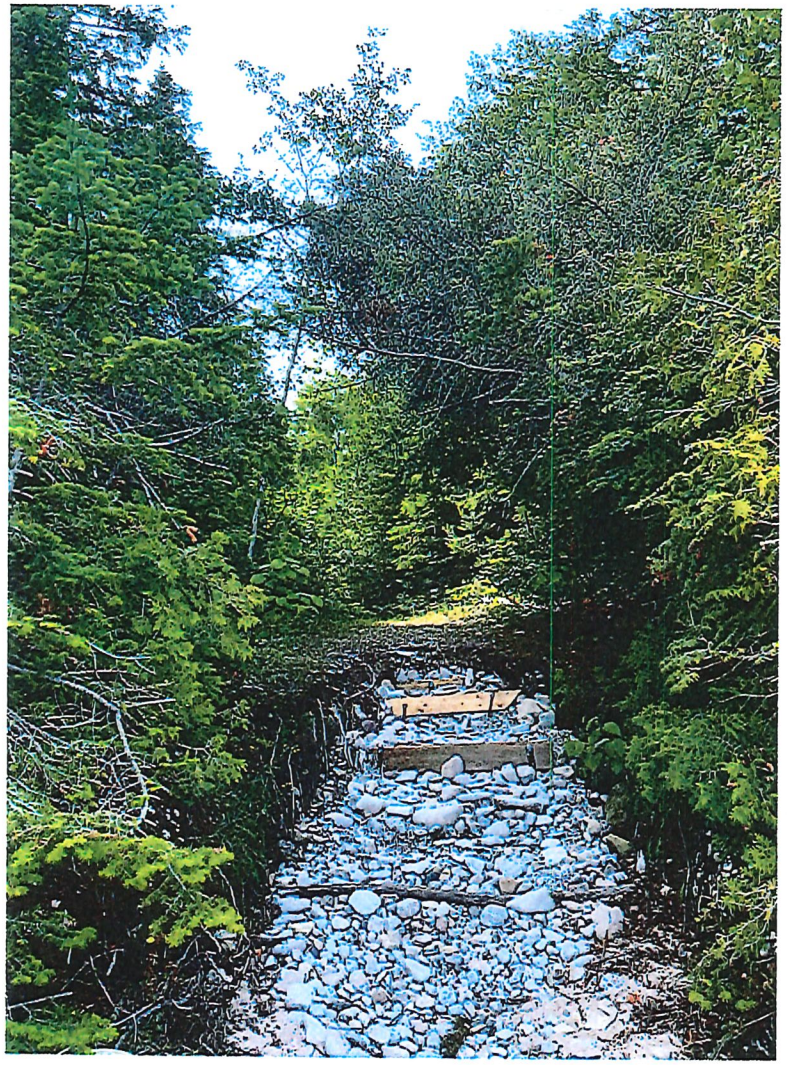

Prepared By

Little Traverse Conservancy
3264 Powell Rd - Harbor Springs, MI 49770
Telephone: 231.347.0991 - Fax: 231.347.1276
www.landtrust.org - LTC@landtrust.org

Enji-minozhiiyaamigak
Viewing Platform Location
Charlevoix County, Michigan

0 250 500 750 1,000
Feet

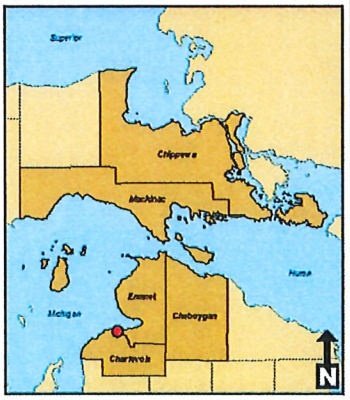

NOTE:
This geographic product was developed by Little Traverse Conservancy (LTC).
Although efforts have been made to ensure information displayed herein is accurate and useful, LTC assume no responsibility for errors in the information and does not guarantee that data are free from errors or inaccuracies. Similarly, LTC assumes no responsibility for consequences of inappropriate uses or interpretations of the data. Accordingly, these digital data are distributed in present condition and user assumes all risk as to their quality, results obtained from their use, and performance of the data. LTC bears no responsibility to inform users of any changes made to this data. Anyone using this data is warned that precision implied by the data may far exceed actual precision.

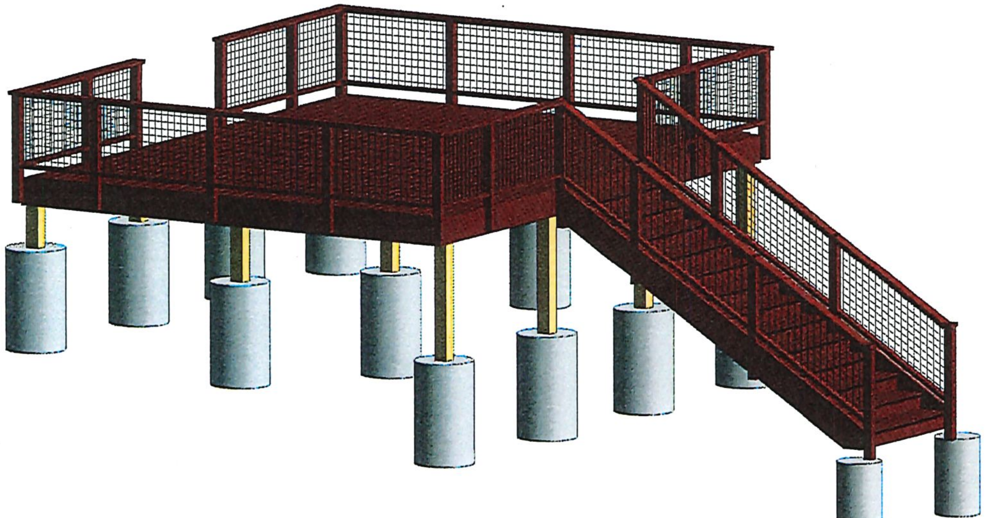

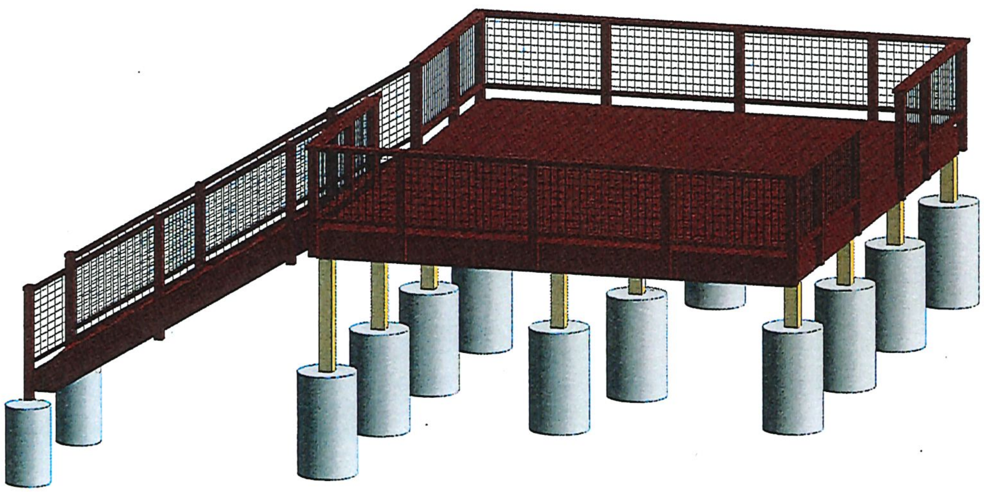

DESIGN CODE: 2015 MICHIGAN BUILDING CODE

1. THESE GENERAL NOTES APPLY TO ALL STRUCTURAL DRAWINGS AND SUPPLEMENT THE PROJECT SPECIFICATIONS WHICH SHALL BE REFERRED TO FOR ADDITIONAL REQUIREMENTS.
2. THE CONTRACTOR SHALL COMPLY WITH ALL FEDERAL, STATE, AND LOCAL SAFETY AND CONSTRUCTION REQUIREMENTS, INCLUDING BUT NOT LIMITED TO OSHA AND MIOSHA. THE CONTRACTOR IS SOLELY RESPONSIBLE FOR ALL DETERMINATIONS OF BRACING AND OTHERWISE, AND CONTRACTOR ACKNOWLEDGES THAT UPON BIDDING ON THESE DRAWINGS AND/OR PERFORMING THE WORK, HAS REVIEWED THE DRAWINGS, UNDERSTANDS THE DRAWINGS AND THE WORK TO BE DONE, AND ACKNOWLEDGES THAT IT HAS CONDUCTED A COMPLETE AND DETAILED INVESTIGATION OF THE WORK.
3. LOADS USED IN DESIGN:

LIVE LOADS:

A. ROOF SNOW
GROUND SNOW LOAD (PG) .... 70 PSF
EXPOSURE FACTOR (CE) 1.0
THERMAL FACTOR (CT) 1.2
SNOW LOAD IMPORTANCE FACTOR (IS) 1.0
FLAT ROOF SNOW LOAD (PF) .... 59 PSF
DEAD LOADING .... 15 PSF
LIVE LOADING .... 100 PSF

B. WIND LOADS
ULTIMATE WIND SPEED .... 115 MPH (VASD =89MPH)
EXPOSURE .... D
SURFACE ROUGHNESS .... Kzt = 1.0
WIND LOAD IMPORTANCE CATEGORY (C) 1.0

C. SEISMIC
SEISMIC DESIGN CATEGORY .... A
GENERAL STRUCTURAL INTEGRITY .... FX=0.01Wx

4. FOUNDATIONS:

A. THIS STRUCTURE HAS BEEN DESIGNED TO BEAR ON SPREAD FOOTINGS PLACED ON UNDISTURBED NATURAL SOILS OR COMPACTED GRANULAR ENGINEERED FILL THE ASSUMED ALLOWABLE SOIL BEARING PRESSURE IS 2,000 PSF.

B. ALL FOOTINGS SHALL BE SET A MINIMUM OF 3'-6" BELOW GRADE OR FROST DEPTH PER LOCAL BUILDING CODE REQUIREMENTS.

C. THE G.C. SHALL BE RESPONSIBLE TO SECURE THE SERVICES OR PROVIDE, AS REQUIRED, ALL EARTHWORK INCLUDING PROVIDING ALL EQUIPMENT, MATERIALS AND QUALIFIED LABOR NECESSARY FOR EXCAVATION, DEWATERING SYSTEMS (IF REQUIRED), BACKFILL AND COMPACTION OF THE SOIL AS REQUIRED TO CONSTRUCT STRUCTURES TO THE LINE AND GRADE AS SHOWN ON THESE PLANS.

D. EXCAVATE TO ELEVATIONS AND DIMENSIONS SHOWN ON THE PLANS WITHIN A TOLERANCE OF ±0.04'. EXCAVATE BY HAND TO FINAL GRADE FOR FOOTINGS.

E. BACKFILL ALL STRUCTURAL WORK WITH CLEAN GRANULAR FILL. ONSITE MATERIAL SHALL BE TESTED AND CONFORM TO MDOT CLASS 2 BEFORE BEING PERMITTED. OTHERWISE BACKFILL MATERIAL SHALL BE IMPORTED THAT MEETS THOSE REQUIREMENTS. DO NOT BACKFILL WITH FROZEN MATERIALS. BACKFILL EACH SIDE OF FOUNDATION WALL SIMULTANEOUSLY. DO NOT BACKFILL BASEMENT WALLS UNTIL BASEMENT FLOOR AND FIRST FLOOR FRAMING AND SHEATHING HAVE BEEN INSTALLED.

F. COMPACT SOILS BELOW FOOTINGS AND CONCRETE FLOOR SLABS IN 6" MAX LIFTS TO A MINIMUM 95% MODIFIED PROCTOR DENSITY. (ASTM D1557)

5. COORDINATION:

A. STRUCTURAL DRAWINGS SHALL BE COORDINATED WITH MECHANICAL AND ARCHITECTURAL DRAWINGS. CONTRACTOR SHALL REPORT DISCREPANCIES TO THE ARCHITECT/ENGINEER. REFER TO MECHANICAL, ELECTRICAL AND ARCHITECTURAL DRAWINGS FOR OPENINGS NOT SHOWN ON STRUCTURAL DRAWINGS. NO OPENING SHALL BE MADE IN ANY STRUCTURAL MEMBER WITHOUT THE WRITTEN APPROVAL OF THE ARCHITECT/ENGINEER.

B. SHOP DRAWINGS SHALL BE PREPARED BY THE FABRICATOR. DO NOT COPY THESE CONSTRUCTION DOCUMENTS FOR USE AS SHOP DRAWINGS. REFER TO SPECS FOR SUBMITTAL REQUIREMENTS.

C. THE STRUCTURE IS DESIGNED TO FUNCTION AS A UNIT UPON COMPLETION. THE CONTRACTOR IS RESPONSIBLE FOR FURNISHING ALL TEMPORARY BRACING AND/OR SUPPORT THAT MAY BE REQUIRED AS THE RESULT OF THE CONTRACTOR'S CONSTRUCTION METHODS AND/OR SEQUENCES.

D. DO NOT SCALE DRAWINGS- USE DIMENSIONS OR REQUEST CLARIFICATION FROM ARCHITECT/ENGINEER.

6. CONCRETE:

A. CONCRETE MATERIALS-ASTM C94
PORTLAND CEMENT: ASTM C150, TYPE I/II.
FLY ASH: ASTM C618, CLASS C OR F. MAX 15% REPLACEMENT.
NORMAL-WEIGHT AGGREGATE: ASTM C33, UNIFORMLY GRADED, NOT LESS THAN 3S. NOMINAL MAXIMUM AGGREGATE SIZE- 1 INCH.
WATER - POTABLE AND COMPLYING WITH ASTM C94.
GROUND GRANULATED BLAST FURNACE SLAG CEMENT, NEUTRAL SET, MAX 15% REPLACEMENT. GGBFSC SHALL NOT BE INCLUDED IN EXTERIOR FLATWORK CONCRETE.

B. ADMIXTURES- ADMIXTURES CERTIFIED BY MANUFACTURER TO CONTAIN NOT MORE THAN 0.1 PERCENT WATER-SOLUBLE CHLORIDE IONS BY MASS OF CEMENTITIOUS MATERIAL AND TO BE COMPATIBLE WITH OTHER ADMIXTURES AND CEMENTITIOUS MATERIALS. DO NOT USE ADMIXTURES CONTAINING CALCIUM CHLORIDE. WATER-REDUCING ADMIXTURE: ASTM C494, TYPE A.

C. STEEL REINFORCEMENT-
REINFORCING BARS: ASTM A615, GRADE 60, DEFORMED.
WELDABLE LOW ALLOY RE-BARS: ASTM A706, GRADE 60, DEFORMED.
PLAIN STEEL WIRE: ASTM A82, AS DRAWN.
STEEL WELDED WIRE REINF., PLAIN, FOR CONC. ASTM A185 FY=75KSI

D. CONCRETE MIXES- PREPARE DESIGN MIXES FOR EACH TYPE AND STRENGTH OF CONCRETE DETERMINED BY EITHER LABORATORY TRIAL MIX OR FIELD TEST DATABASES. PROPORTION CONCRETE ACCORDING TO ACI 211.1 AND ACI 301
1) FOOTINGS-
COMPRESSIVE STRENGTH 3,500 PSI, WATER: CEMENT RATIO .50 MAX, MAX SLUMP 6", ENTRAINED, AIR 6% ± 1.5%

E. DESIGN, ERECT, SHORE, BRACE, AND MAINTAIN FORMWORK, ACCORDING TO ACI 301. DO NOT USE RUST-STAINED STEEL FORM-FACING MATERIAL. PROVIDE TEMPORARY OPENINGS FOR CLEANOUTS AND INSPECTION PORTS WHERE INTERIOR AREA OF FORMWORK IS INACCESSIBLE. CHAMFER EXTERIOR CORNERS AND EDGES OF PERMANENTLY EXPOSED CONCRETE. FORM OPENINGS, OFFSETS, KEYWAYS, AND BULKHEADS REQUIRED IN THE WORK. DETERMINE SIZES AND LOCATIONS FROM TRADES PROVIDING SUCH ITEMS.

F. FORM TIES: FACTORY-FABRICATED, FORM TIES DESIGNED TO RESIST LATERAL PRESSURE OF FRESH CONCRETE ON FORMS AND TO SUPPORT REINFORCING STEEL IN POSITIONS INDICATED ON THE DRAWINGS DURING CONCRETING AND CONSOLIDATION.

G. PLACE AND SECURE ANCHORAGE DEVICES AND OTHER EMBEDDED ITEMS, USE SETTING DRAWINGS, TEMPLATES, AND DIRECTIONS FURNISHED WITH ITEMS TO BE EMBEDDED. INSTALL ANCHOR BOLTS, ACCURATELY LOCATED, TO ELEVATION REQUIRED.

H. COMPLY WITH "CRSI'S MANUAL OF STANDARD PRACTICE" FOR FABRICATING AND PLACING REINFORCEMENT. CLEAN REINFORCEMENT OF LOOSE RUST AND MILL SCALE, EARTH, AND ICE. ACCURATELY POSITION, SUPPORT AND SECURE REINFORCEMENT AGAINST DISPLACEMENT. LOCATE AND SUPPORT REINFORCEMENT WITH BAR SUPPORTS TO MAINTAIN MINIMUM CONCRETE COVER. DO NOT TACK WELD CROSSING REINFORCING BARS.

I. IF TEMPERATURE AT THE BUILDING SITE FALLS BELOW 50° FAHRENHEIT AT ANY TIME DURING THE FIRST 24 HOURS AFTER POUR, FOLLOW THE RECOMMENDATIONS IN GUIDE TO COLD WEATHER CONCRETE ACI 306R. CONVERSELY, TEMPERATURES ABOVE 77° FAHRENHEIT REQUIRE CONFORMANCE WITH GUIDE TO HOT WEATHER CONCRETE ACI 305 R.

J. BEFORE PLACING CONCRETE, VERIFY THAT INSTALLATION OF FORMWORK, REINFORCEMENT, AND EMBEDDED ITEMS IN COMPLETE AND THAT REQUIRED INSPECTIONS HAVE BEEN PERFORMED. WATER SHOWN ON BATCH TICKET AS BEING WITHHELD MAY ONLY BE ADDED AT PROJECT SITE, BEFORE ANY CONCRETE HAS BEEN DISCHARGED AND BE SUBJECT TO LIMITATIONS OF ACI 301. DO NOT ADD WATER TO CONCRETE AFTER ADDING HIGH-RANGE WATER-REDUCING ADMIXTURES TO MIX. CONCRETE TESTING SHALL BE AFTER ANY FIELD ADJUSTMENTS AND THOROUGH MIXING.

K. DEPOSIT CONCRETE CONTINUOUSLY OR IN LAYERS OF SUCH THICKNESS THAT NO NEW CONCRETE WILL BE PLACED ON CONCRETE THAT HAS HARDENED ENOUGH TO CAUSE SEAMS OR PLANES OF WEAKNESS. DEPOSIT CONCRETE TO AVOID SEGREGATION. DEPOSIT CONCRETE IN FORMS IN HORIZONTAL LAYERS NO DEEPER THAN 24 INCHES AND IN A MANNER TO AVOID INCLINED CONSTRUCTION JOINTS. PLACE EACH LAYER WHILE PRECEDING LAYER IS STILL PLASTIC, TO AVOID COLD JOINTS.

L. CONSOLIDATE ALL PLACED CONCRETE WITH INTERNAL MECHANICAL VIBRATING EQUIPMENT. EXTERIOR FORM VIBRATION IS NOT SUFFICIENT. DO NOT USE VIBRATORS TO TRANSPORT CONCRETE INSIDE FORMS.

7. WOOD

A. FRAMING LUMBER: (UNLESS NOTED OTHERWISE)
(1) EXTERIOR:
JOISTS & POSTS .... P.T. #2 SYP, U.N.O.
(2) ALL COMPOSITE WOOD PRODUCTS DESIGNED AS TRUSS JOIST MACMILLAN. FOLLOW ALL REQUIREMENTS AND RECOMMENDATIONS OF MANUFACTURER.
A. E = 1.8E, FB = 2400 PSI, GLUE-LAMINATED TIMBER, 24F-V5M1

A. ALL WOOD IN DIRECT CONTACT WITH CONCRETE SHALL BE PRESSURE TREATED. WOOD SILL PLATES LOCATED INTERIOR OF EXTERIOR SIDING MAY BE TREATED BEFORE BORATE BASED PRESERVATIVE. ALL WOOD FRAMING AND SHEATHING SUPPORTING STONE / MASONRY VENEER LOCATED OUTSIDE THE BUILDING ENVELOPE SHALL BE PRESSURE TREATED.

B. GLUE AND NAIL 2X STUDS TOGETHER TO FORM BUILT-UP WOOD COLUMNS. USE A NUMBER OF STUDS FOR EACH COLUMN SUCH THAT THE COLUMN WIDTH EQUALS OR EXCEEDS THE WIDTH OF THE SUPPORTED MEMBER BUT IN NO CASE LESS THAN TWO (2) STUDS. MINIMUM NAILING: (3) 0.130" X 3.5" NAILS @ 6" O.C. FROM EACH DIRECTION, OFFSET BY 3"

C. ALL WOOD CONSTRUCTION SHALL BE IN CONFORMANCE WITH THE PROVISIONS OF THE NATIONAL DESIGN SPECIFICATION (NDS) FOR WOOD CONSTRUCTION 2012 EDITION.

D. CALCULATED LIVE LOAD DEFLECTIONS OF FLOOR JOIST SHALL NOT EXCEED L/480 OF THE SPAN LENGTH. DEAD LOAD FLOOR JOIST DEFLECTION SHALL NOT EXCEED 0.375 INCHES.

E. ANY SUBSTITUTION OF ENGINEERED WOOD PRODUCTS (EWP), AS NOTED ON THESE DRAWINGS, WITHOUT THE PRIOR WRITTEN APPROVAL FROM THE STRUCTURAL ENGINEER OF RECORD, VOIDS ANALYSIS.

F. ALL WOOD CONNECTORS AND FASTENERS SHOWN ARE MANUFACTURED BY SIMPSON STRONG-TIE, UNLESS NOTED OTHERWISE. GRK-RSS SCREWS ARE NOT A SUBSTITUTE FOR SDS SCREWS, UNLESS SPECIFICALLY SHOWN OR APPROVED BY THE ENGINEER IN WRITING.

G. PROVID SOLID BLOCKING BETWEEN FLOOR JOIST ABOVE BEARING WALLS, BEAMS, AND AT APPROXIMATELY MID-SPAN, NO MORE THAN 10' ON CENTER. PROVIDE DOUBLE JOIST UNDER WALLS PARALLEL WITH JOIST OR SOLID BLOCKING BETWEEN ADJACENT JOIST @ 16"OC

Performance Engineers, Inc.
Civil / Structural Engineering
406 Petoskey Avenue
Charlevoix, Michigan 49720
Phone: (231) 547-2121
Fax: (231) 547-0084
www.performanceeng.com

CONSULTANTS

SEAL

STATE OF MICHIGAN
[signature]
JUL 24, 2024
License No. 6201309405
LICENSED PROFESSIONAL ENGINEER

PROJECT TITLE

ENJI-MINOZHIIYAAMIGAK PLATFORM

PROJECT LOCATION

DIVISION STREET
BAY SHORE, MICHIGAN

OWNER

LITTLE TRAVERSE CONSERVANCY

No.	Description	Date
0	PRELIMINARY	05/20/2024
1	PERMITS & CONSTRUCTION	07/24/2024

GENERAL NOTES

PROJECT NUMBER	24-6413
DATE	07-24-2024
DESIGNED BY	PEI
DRAWN BY	PEI
CHECKED BY	PEI

S0.1

SCALE

7/24/2024 3:26:14 PM

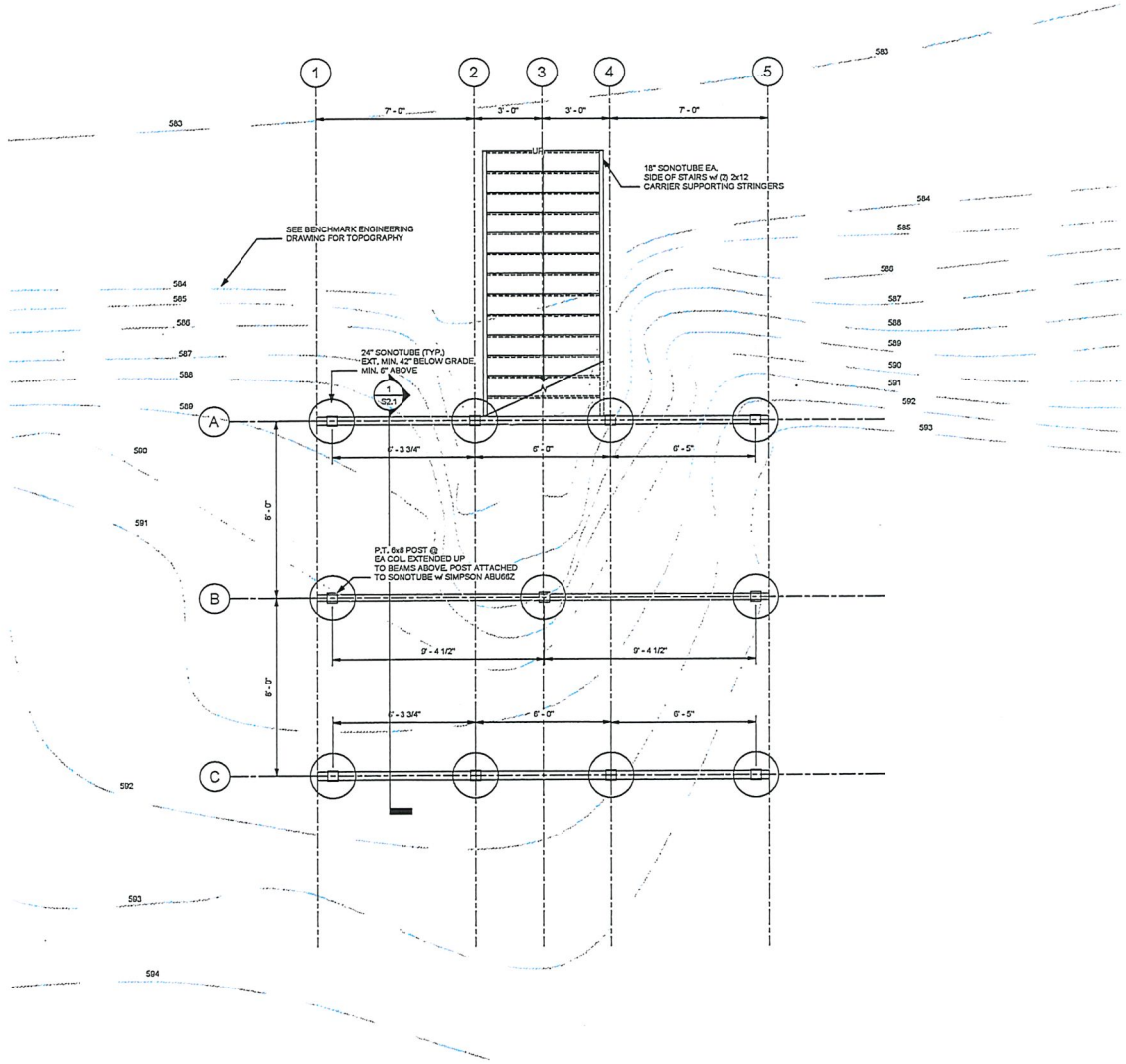

1 BOARDWALK COLUMNS
3/8" = 1'-0"

Performance Engineers, Inc.

Civil / Structural Engineering
406 Petoskey Avenue
Charlevoix, Michigan 49720
Phone: (231) 547-2121
Fax: (231) 547-0064
www.performanceeng.com

CONSULTANTS

SEAL

PROJECT TITLE

ENJI-MINOZHIIYAAMIGAK PLATFORM

PROJECT LOCATION

DIVISION STREET
BAY SHORE, MICHIGAN

OWNER

LITTLE TRAVERSE CONSERVANCY

No.	Description	Date
0	PRELIMINARY	05/20/2024
1	PERMITS & CONSTRUCTION	07/24/2024

COLUMN PLAN

PROJECT NUMBER	24-6413
DATE	07-24-2024
DESIGNED BY	PEI
DRAWN BY	PEI
CHECKED BY	PEI

S1.0

SCALE 3/8" = 1'-0"

7/24/2024 3:26:15 PM

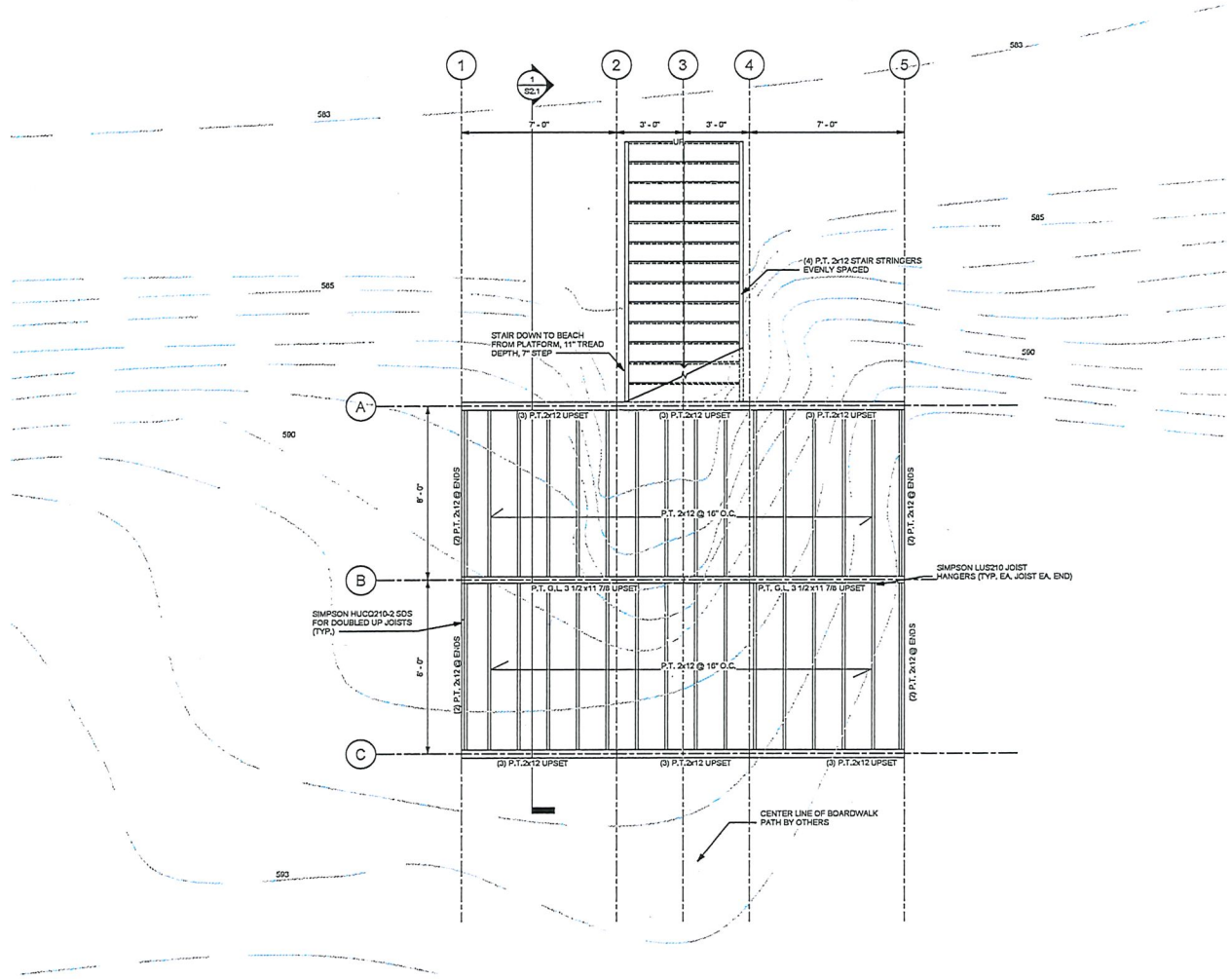

1 PLATFORM FRAMING PLAN
3/8" = 1'-0"

Performance Engineers, Inc.

Civil / Structural Engineering
406 Petoskey Avenue
Charlevoix, Michigan 49720
Phone: (231) 547-2121
Fax: (231) 547-0084
www.performanceeng.com

CONSULTANTS

SEAL

STATE OF MICHIGAN
PRELIMINARY
THOMAS
Jul 24, 2024
License No.
6201309405
REGISTERED PROFESSIONAL ENGINEER

PROJECT TITLE

ENJI-MINOZHIIYAAMIGAK PLATFORM

PROJECT LOCATION

DIVISION STREET
BAY SHORE, MICHIGAN

OWNER

LITTLE TRAVERSE CONSERVANCY

No.	Description	Date
0	PRELIMINARY	05/20/2024
1	PERMITS & CONSTRUCTION	07/24/2024

FRAMING PLAN

PROJECT NUMBER	24-6413
DATE	07-24-2024
DESIGNED BY	PEI
DRAWN BY	PEI
CHECKED BY	PEI

S1.1

SCALE 3/8" = 1'-0"

7/24/2024 3:26:15 PM

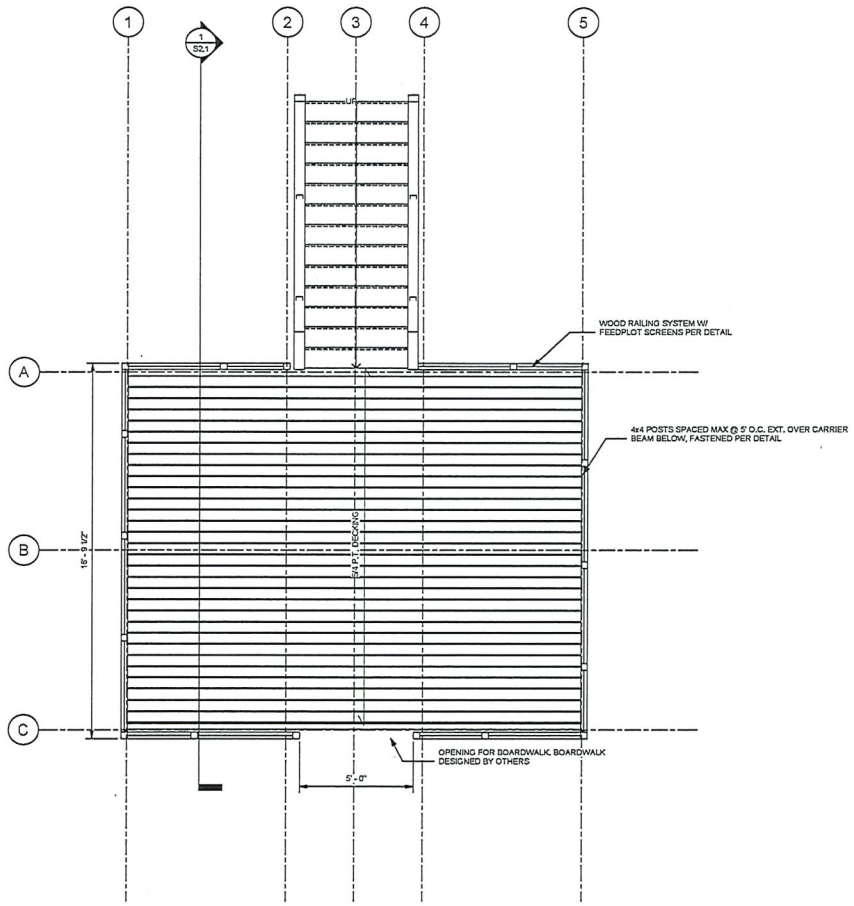

1 DECKING AND RAILING PLAN
3/8" = 1'-0"

Performance Engineers, Inc.

Civil / Structural Engineering
406 Petoskey Avenue
Charlevoix, Michigan 49720
Phone: (231) 547-2121
Fax: (231) 547-0084
www.performanceeng.com

CONSULTANTS

SEAL

STATE OF MICHIGAN
PRELIMINARY
THOMAS
Jul 24, 2024
License No.
6201309405
LICENSED PROFESSIONAL ENGINEER

PROJECT TITLE

ENJI-MINOZHIIYAAMIGAK PLATFORM

PROJECT LOCATION

DIVISION STREET
BAY SHORE, MICHIGAN

OWNER

LITTLE TRAVERSE CONSERVANCY

No.	Description	Date
0	PRELIMINARY	05/20/2024
1	PERMITS & CONSTRUCTION	07/24/2024

DECKING & RAILING

PROJECT NUMBER	24-6413
DATE	07-24-2024
DESIGNED BY	PEI
DRAWN BY	PEI
CHECKED BY	PEI

S1.2

SCALE 3/8" = 1'-0"

7/24/2024 3:28:16 PM

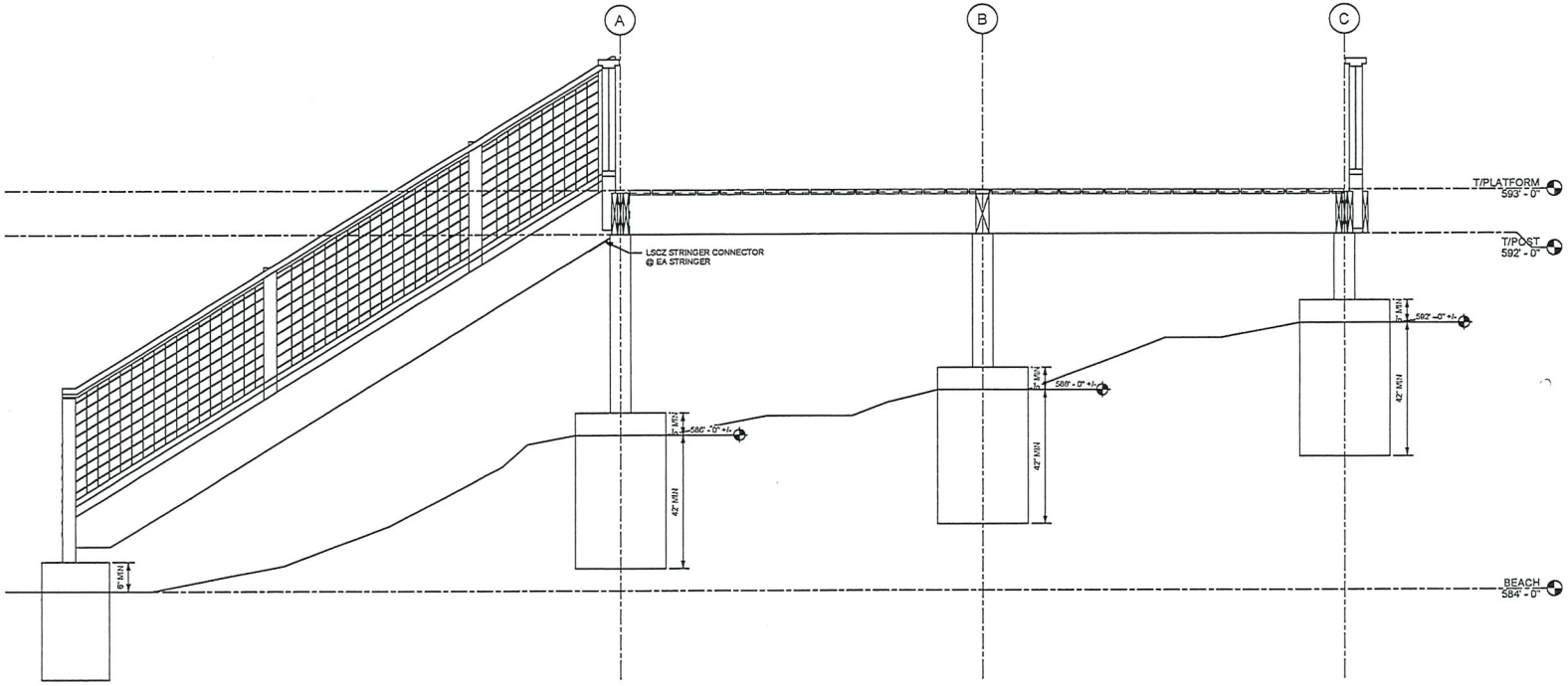

1 STRUCTURAL SECTION
3/4" = 1'-0"

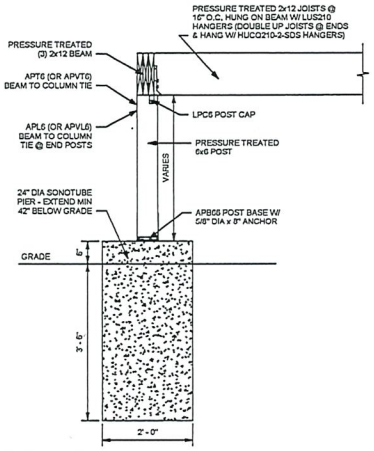

2 STRUCTURAL DETAIL
3/4" = 1'-0"

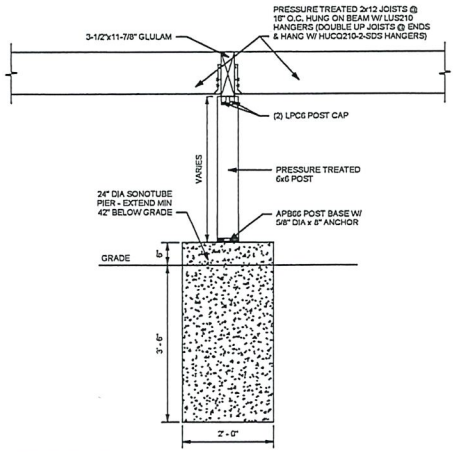

3 STRUCTURAL DETAIL
3/4" = 1'-0"

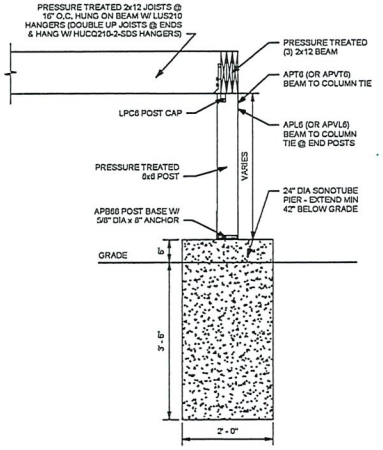

4 STRUCTURAL DETAIL
3/4" = 1'-0"

Performance Engineers, Inc.

Civil / Structural Engineering
406 Petoskey Avenue
Charlevoix, Michigan 49720
Phone: (231) 547-2121
Fax: (231) 547-0064
www.performanceeng.com

CONSULTANTS

SEAL

PROJECT TITLE

ENJI-MINOZHIIYAAMIGAK
PLATFORM

PROJECT LOCATION

DIVISION STREET
BAY SHORE, MICHIGAN

OWNER

LITTLE TRAVERSE
CONSERVANCY

No.	Description	Date
0	PRELIMINARY	05/20/2024
1	PERMITS & CONSTRUCTION	07/24/2024

STRUCTURAL SECTION
AND DETAILS

PROJECT NUMBER	24-6413
DATE	07-24-2024
DESIGNED BY	PEI
DRAWN BY	PEI
CHECKED BY	PEI

S2.1

SCALE 3/4" = 1'-0"

7/24/2024 3:26:17 PM

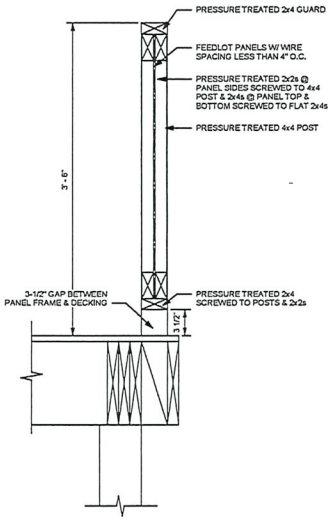

1 GUARD RAIL SECTION
1 1/2" = 1'-0"

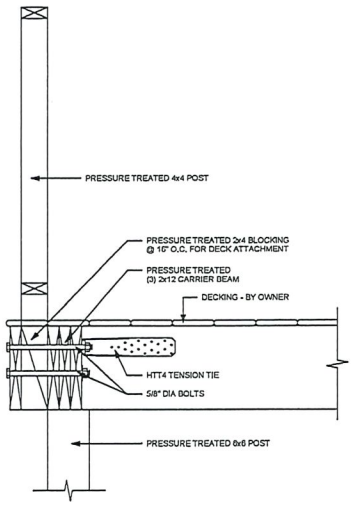

2 GUARD POST CONNECTION @ NORTH AND SOUTH SIDES
1 1/2" = 1'-0"

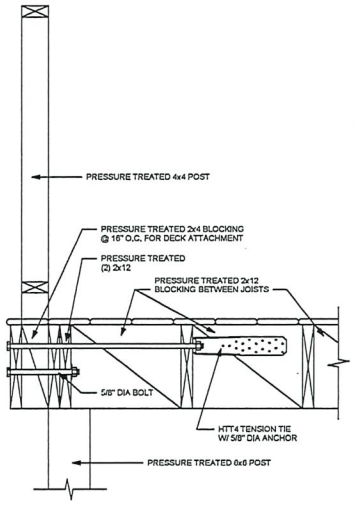

3 GUARD POST CONNECTION @ WEST AND EAST SIDES
1 1/2" = 1'-0"

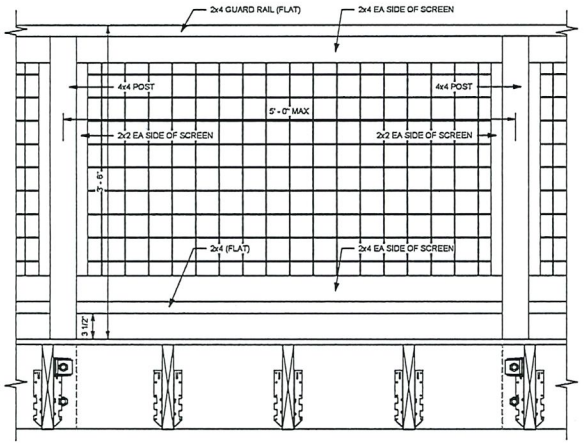

4 GUARD RAIL SECTION (2)
1 1/2" = 1'-0"

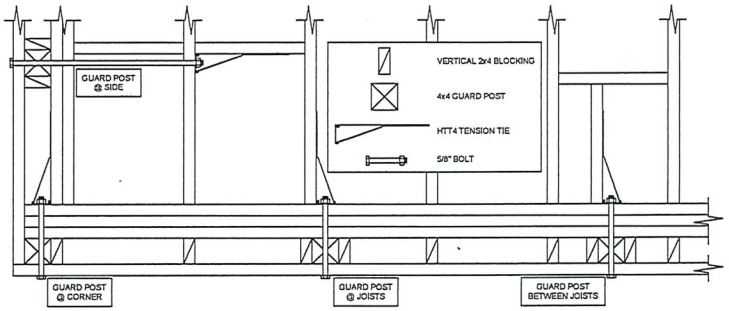

5 GUARD POST CONNECTION - PLAN VIEW
1 1/2" = 1'-0"

Performance Engineers, Inc.
Civil / Structural Engineering
400 Petoskey Avenue
Charlevoix, Michigan 49720
Phone: (231) 547-2121
Fax: (231) 547-0064
www.performanceeng.com

CONSULTANTS

SEAL

STATE OF MICHIGAN
DEAN HAINES
THOMPSON
Jul 24, 2024
License No. 6201309405
LICENSED PROFESSIONAL ENGINEER

PROJECT TITLE

ENJI-MINOZHIIYAAMIGAK PLATFORM

PROJECT LOCATION

DIVISION STREET
BAY SHORE, MICHIGAN

OWNER

LITTLE TRAVERSE CONSERVANCY

No.	Description	Date
0	PRELIMINARY	05/20/2024
1	PERMITS & CONSTRUCTION	07/24/2024

GUARD RAIL AND RAILING DETAILS

PROJECT NUMBER	24-6413
DATE	07-24-2024
DESIGNED BY	PEI
DRAWN BY	PEI
CHECKED BY	PEI

S2.2

SCALE 1 1/2" = 1'-0"

7/24/2024 3:24:17 PM

GRETCHEN WHITMER
GOVERNOR

STATE OF MICHIGAN
DEPARTMENT OF
ENVIRONMENT, GREAT LAKES, AND ENERGY
GAYLORD DISTRICT OFFICE

PHILLIP D. ROOS
DIRECTOR

July 16, 2024

VIA EMAIL

Charles Dawley
Little Traverse Conservancy
3264 Powell Road
Harbor Springs, Michigan 49740

Dear Charles Dawley:

SUBJECT: No Permit Required
Submission Number: HQ3-Z226-Z0RGT
Site Name: 15-6413 Division Ave-Hayes Twp

The Department of Environment, Great Lakes, and Energy (EGLE), Water Resources Division (WRD) has completed the review of your application and plans submitted to this office for your proposed project. The review indicates that the proposed project does not require a permit under Part 325, Great Lakes Submerged Lands, of the Natural Resources and Environmental Protection Act, 1994 PA 451, as amended (NREPA).

This letter does not obviate the necessity of obtaining permits under the provisions of Part 91, Soil Erosion and Sedimentation Control, of the NREPA, or permits from other governmental units.

If you have any questions, please feel free to contact me at 989-619-8519; EmingtonE@Michigan.gov; or EGLE, WRD, Gaylord District Office, 2100 West M-32, Gaylord, Michigan 49735-9282.

Sincerely,

Erin Emington

Digitally signed by: Erin Emington
DN: CN = Erin Emington email = EmingtonE@michigan.gov C = US O = EGLE OU = WRD
Date: 2024.07.16 13:57:30 -04'00'

Erin Emington
Gaylord District Office
Water Resources Division

cc: Alex Chumney, U.S. Army Corps of Engineers
Charlevoix County Clerk
Charlevoix CEA
Hayes Township Clerk

Gmail

zoning hayestownshipmi <zoninghayestownshipmi@gmail.com>

enji-minozhiiyaamigak Variance Application

2 messages

Charles Dawley <charles@landtrust.org> Tue, Jul 23, 2024 at 9:12 AM
To: zoning@hayestownshipmi.gov

Hi Ron,

I am working on the variance application, and it is asking about the "relief from the following zoning ordinance section." Could you tell me which section number applies? I have been informed that it involves building within 100 feet of the OHWM and a structure larger than 200 square feet.

Thank you!

--

Charles Dawley
Little Traverse Conservancy
GIS Technician/Stewardship
direct: 231.344.1019
office: 231.347.0991
charles@landtrust.org
www.landtrust.org

Charles Dawley <charles@landtrust.org> Tue, Jul 23, 2024 at 9:43 AM
To: zoning@hayestownshipmi.gov

Here is a map of the plan if this helps.
[Quoted text hidden]

Enji-minozhiiyaamigak viewign platfrom.jpg
946K

Construction and Safety Standards Act of 1974.

C. The wheels, axles and towing assembly shall be removed from a mobile home before the unit is attached to the foundation. Additionally, no mobile home shall have any exposed undercarriage or chassis.

D. Mobile homes shall not be used as an accessory building.

2. Replacement of lawfully existing non-conforming mobile homes shall be allowed provided the site and age of replacement would be in greater compliance with the Zoning Ordinance, and is located in compliance with the applicable district setbacks. The replacement would not increase the non-conformity or would not be contrary to the intent of the Ordinance and shall comply with the additional standards A-D listed above in subsection 3.11.1.

Section 3.12 Recreational Vehicles

Temporary occupancy of travel trailers, motor homes and other similar vehicles shall not exceed ninety (90) days in any calendar year and shall not be connected to utility, water supply and sanitary sewer. No more than two (2) recreational vehicles shall be allowed on parcels with an existing dwelling unit. They are to be located in a side or rear yard and the placement must comply with district setbacks. In the event that two or more recreational vehicles occupy a parcel for longer than the ninety (90) day limit, they shall then be required to be stored within an enclosed structure.

Section 3.13 Animals

The keeping of poultry, pigs, horses or other such livestock is allowed in the Agricultural and Rural Residential Districts. In other districts, provided the parcels of land are five (5) acres or greater in size, the keeping of poultry, pigs, horses or other such livestock is allowed, as provided for under the Michigan Right to Farm Act.

Section 3.14 Waterfront Regulations

1. Intent
The waterways and lakes in and adjacent to the lands of Hayes Township are invaluable assets to the economy and quality of life, and therefore must be preserved in a natural fashion to maintain health of these waterways as well as the natural beauty of Northern Michigan. Thus, owners of waterfront lots have an added responsibility regarding the preservation and protection of these natural resources, water quality and community scenic and recreational values.

2. Setback Area Regulations
Except as provided herein, no structures (with the exception of a patio/deck, walkway, retaining wall, launching ramps and / or docking facilities including steps) shall be allowed within one hundred (100) feet of the Ordinary High Water Mark on Lake Michigan and Lake Charlevoix, and eighty (80) feet on Susan Lake, and such excepted facilities shall meet the side yard setbacks for the district in which they are located.

A. One at-grade patio/deck, not to exceed two hundred (200) square feet may be located within the 100-ft. setback following review and approval by the Zoning Administrator to ensure the structure will be installed in a manner which will cause the least negative environmental impact.

I. No portion of the patios/deck shall be located more than two feet above the natural grade.

II. It is the desire of the Township to bring nonconforming patios/decks into conformance with provisions of this Ordinance as rapidly as is permitted by law.

3. Shoreland Protection Strip

A Shoreland Protection Strip shall be required on all waterfront lots. The shoreland protection strip shall include all of the land area located within fifty (50) feet of the Ordinary High Water Mark of a lake or a stream abutting or traversing the property in question. The purpose of the strip is to protect the lake by preventing soil erosion, providing a filter for the removal of pesticides, fertilizers and other potential water pollutants, and to maintain a visual barrier. Within the shoreland protection strip, the following development or use restrictions (A-L below) shall apply:

A. **The Shoreland Protection Strip shall not be altered more than 20% under any condition, except to remove dead trees or shrubs, remove invasive species, or for selective trimming of trees as permitted in 3.14.3I.**

B. For any new construction or renovation of a structure located on a waterfront lot, the establishment, restoration and/or maintenance of a Shoreland Protection Strip shall be required. Refer to Section 3.14.8 for details on the waterfront development approval process.

C. Shoreline retaining structures shall be permitted with appropriate agency approvals.

D. Walkways or stairs for water access shall be allowed, provided they:

I. Do not exceed six (6) feet in width;

II. Are constructed in such a way that stormwater is slowed;

III. Take the most environmentally sensitive route between each destination; and

IV. Are not constructed in such a way that they expand the deck beyond the two hundred (200) square foot maximum.

E. The use of pesticides, herbicides and fertilizers is prohibited.

F. Leaves, grass clippings and similar yard/garden wastes may not be burned or stored. Composting of food waste is encouraged, but must be located a minimum of one hundred (100) feet from the Ordinary High Water Mark.

G. No septic tanks or septic system filtration fields shall be located within the Shoreland Protection Strip.

H. Natural vegetation cover, including trees, shrubs or herbaceous plants shall be maintained on at least eighty percent (80%) of the lake or stream frontage within the Shoreland Protection Strip. Please refer to the list of recommended species by Northwest Michigan Invasive Species Network. The list of recommended native species is available at the Township Hall and an electronic link is posted on the Township website. The vegetation on the remaining twenty percent (20%) may be cleared for a single view corridor; or selective trees removed to provide for a filtered view throughout the frontage, provided the cumulative total of the trees removed does not exceed the allowed twenty percent (20%) of the frontage. When trees are removed, root systems shall be left in place for shoreline stabilization. For purposes of this subsection, the natural vegetation coverage within the shoreland protection strip shall be determined by the sum of the area of the waterfront view blocked by all portions of each vegetation plant (trunk, limbs, and leaves) when viewed directly landward behind each plant.

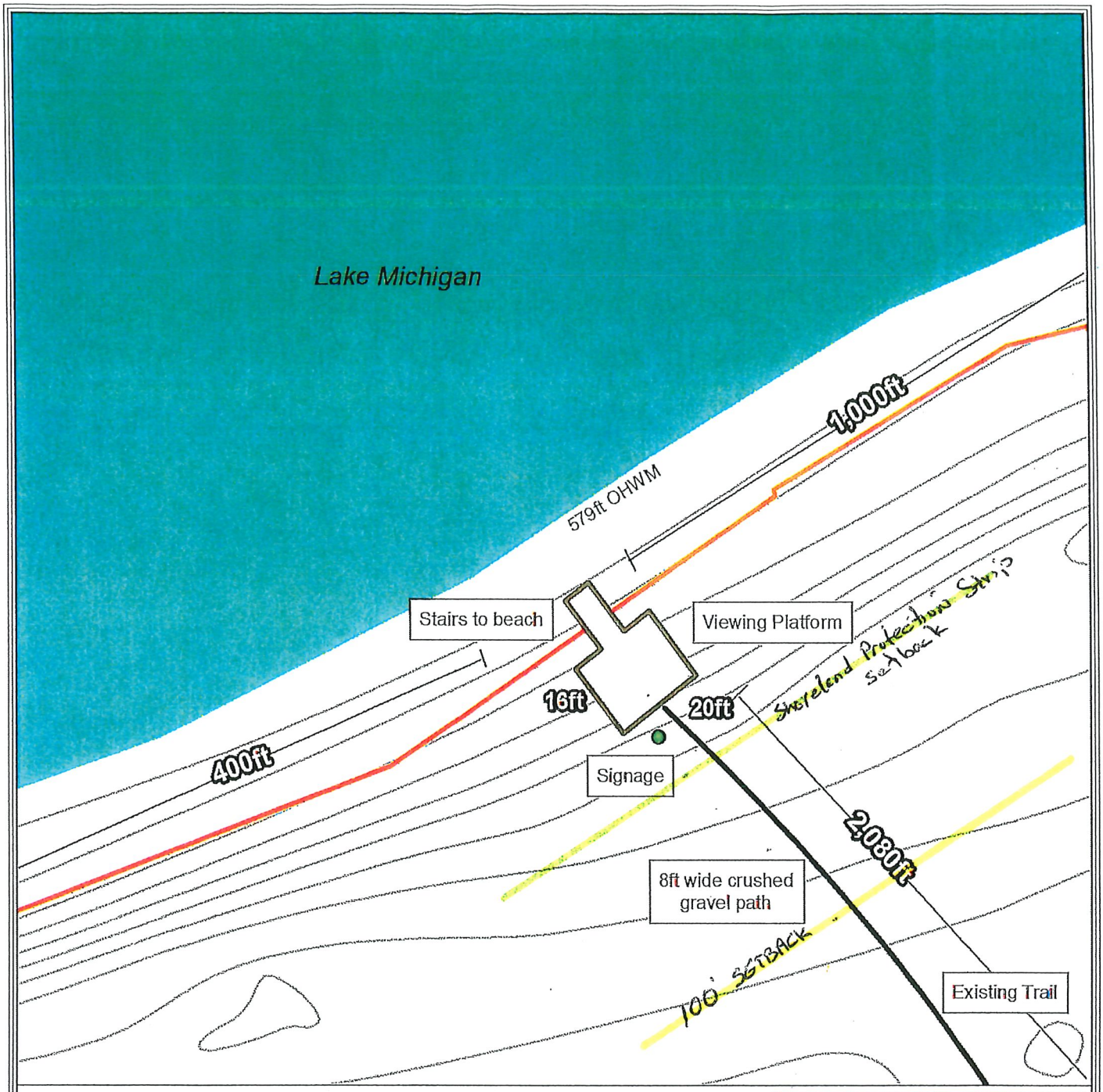

Prepared By

Little Traverse Conservancy
3264 Powell Rd - Harbor Springs, MI 49770
Telephone: 231.347.0991 - Fax: 231.347.1276
www.landtrust.org - LTC@landtrust.org

Enji-minozhiiyaamigak Viewing Platform Location Charlevoix County, Michigan

0 10 20 30 40
Feet

NOTE:
This geographic product was developed by Little Traverse Conservancy (LTC).
Although efforts have been made to ensure information displayed herein is accurate and useful, (LTC) assume no responsibility for errors in the information and does not guarantee that data are free from errors or inaccuracies. Similarly (LTC) assumes no responsibility for consequences of inappropriate uses or interpretations of the data. Accordingly, these digital data are distributed in present condition and user assumes all risk as to their quality, results obtained from their use, and performance of the data. (LTC) bears no responsibility to inform users of any changes made to this data. Anyone using this data is advised that precision implied by the data may far exceed actual precision.

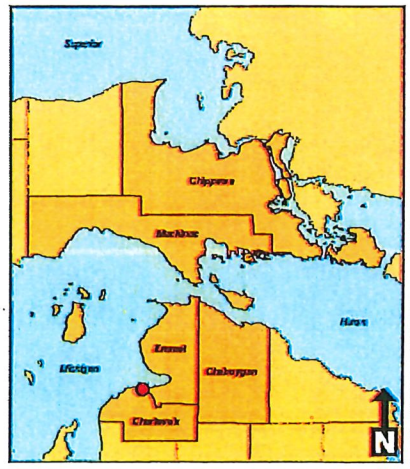

Gmail

clerk hayestownshipmi <clerkhayestownshipmi@gmail.com>

ZBA letter

tim boyko <tim@timboyko.com> Fri, Sep 13, 2024 at 8:29 AM
To: clerk hayestownshipmi <clerkhayestownshipmi@gmail.com>, April Hilton <deputyclerkhayes@gmail.com>

Please include the following in the ZBA packet for the September 18th hearing, thank you.

Dear Members,

The ZBA is being asked for a dimensional variance to allow the LTC to construct for the public their first universally accessible trail and viewing deck at the new 56 acre Lake Michigan nature preserve in Hayes Township.

In analyzing any zoning decision we should consider the impact if everyone applied it to their property. Good for one good for all. This approach is especially crucial when dealing with lakefront zoning when many parcels are involved because widespread adoption may have a disastrous effect on a sensitive public resource. This leads us to a very conservative and conservationists approach in our Zoning Ordinance.

In deciding a variance request we should consider the unique circumstances of the property, fairness to neighbors, impact on public safety and whether it follows the spirit of the Zoning Ordinance.

In this variance request we have a unique non-commercial public access parcel which are few and far between. I believe we can be more accommodating for public use versus the treatment of private parcels because of its very limited impact due to the low number of potential sites.

This variance is requesting a somewhat larger dimensions for decks and walkways and a smaller setback from the lake. A universally accessible trail with deck and ramps placed close enough to the shoreline will allow a safer and more intimate lake experience for those unable to scramble down to the beach. The preserve is 56 acres and there a no close by neighbors. The deck occupies a very small percentage of the 1320 feet of lakefront that is being preserved forever. This proposal overwhelmingly protects the lake and is in the spirit of our zoning.

In sum this request fulfills the requirements of a zoning variance:

- it is a unique property,
- it is fair to adjacent properties
- it will increase public safety and
- it is not in conflict with the spirit of our zoning ordinance.

The boat launch and pier at Camp Seagull was a similar accommodation to enhance the public's access. This is successful and I believe the deck and ramps requested for the new preserve (Enji-minozhiiyaamigak, The Place of Peacefullness) would likewise be a successful public access enhancement.

Since the 1970's when LTC was founded by a few citizens concerned with protecting what makes our area attractive. LTC has become the leading agency in Northern Michigan for preservation and a steadfast partner with our Township including the biggest investment in land to date in this 56 acre site. LTC currently provides over 1500 acres for public access in Hayes Township and many more acres protected forever by private conservation easements.

Be mindful that this preserve will serve hundreds if not thousands every year and will add a unique recreation opportunity for Hayes Township residents and visitors. I encourage you to allow the requested variance.

Respectfully,

Tim Boyko