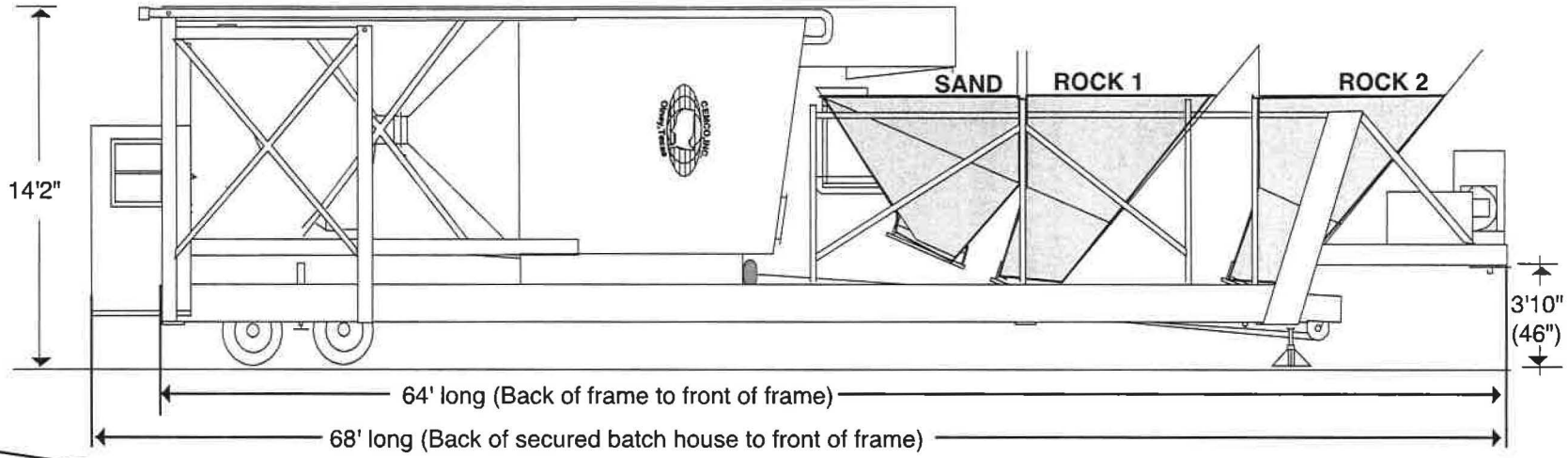

Cemco, Inc. 3 Bin Batch Plant

(Beginning 2013)

The drawings are not in proportion,
and the measurements are approximate.
It is always best to measure the specific plant.

[68' long x 11'11" wide x 14'2" tall
(with 5th wheel at 46",travel height varies
due to the truck pulling the equipment.)
55,000 lbs (estimated weight)]

Ranges:
☆ Jack Pads range in height from 1'6" to 2'3"
Discharge point with Jack Pad at Lowest setting: 11'6"
Discharge point with Jack Pad at Highest Setting: 13'6"

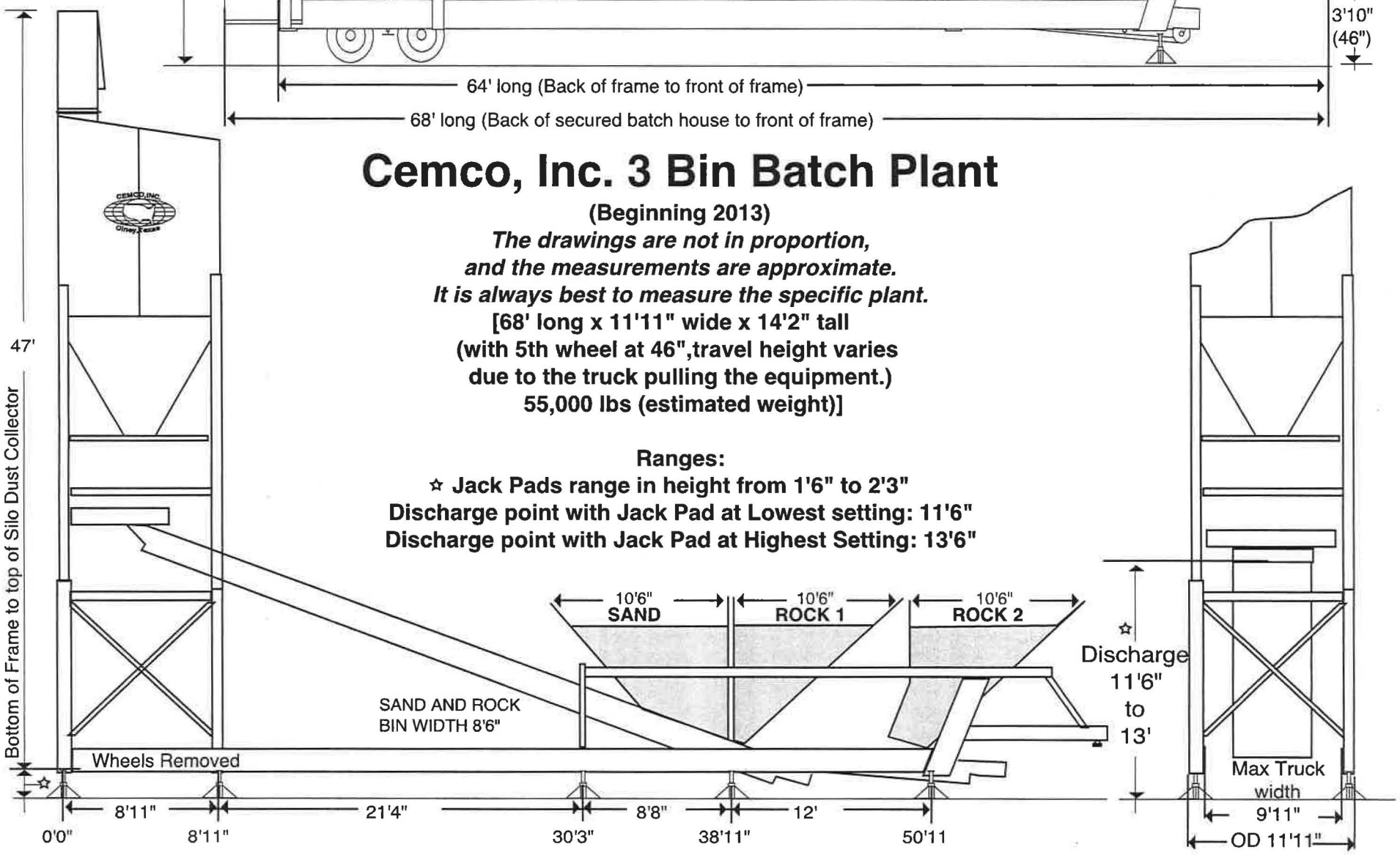

Hayes Twp GIS

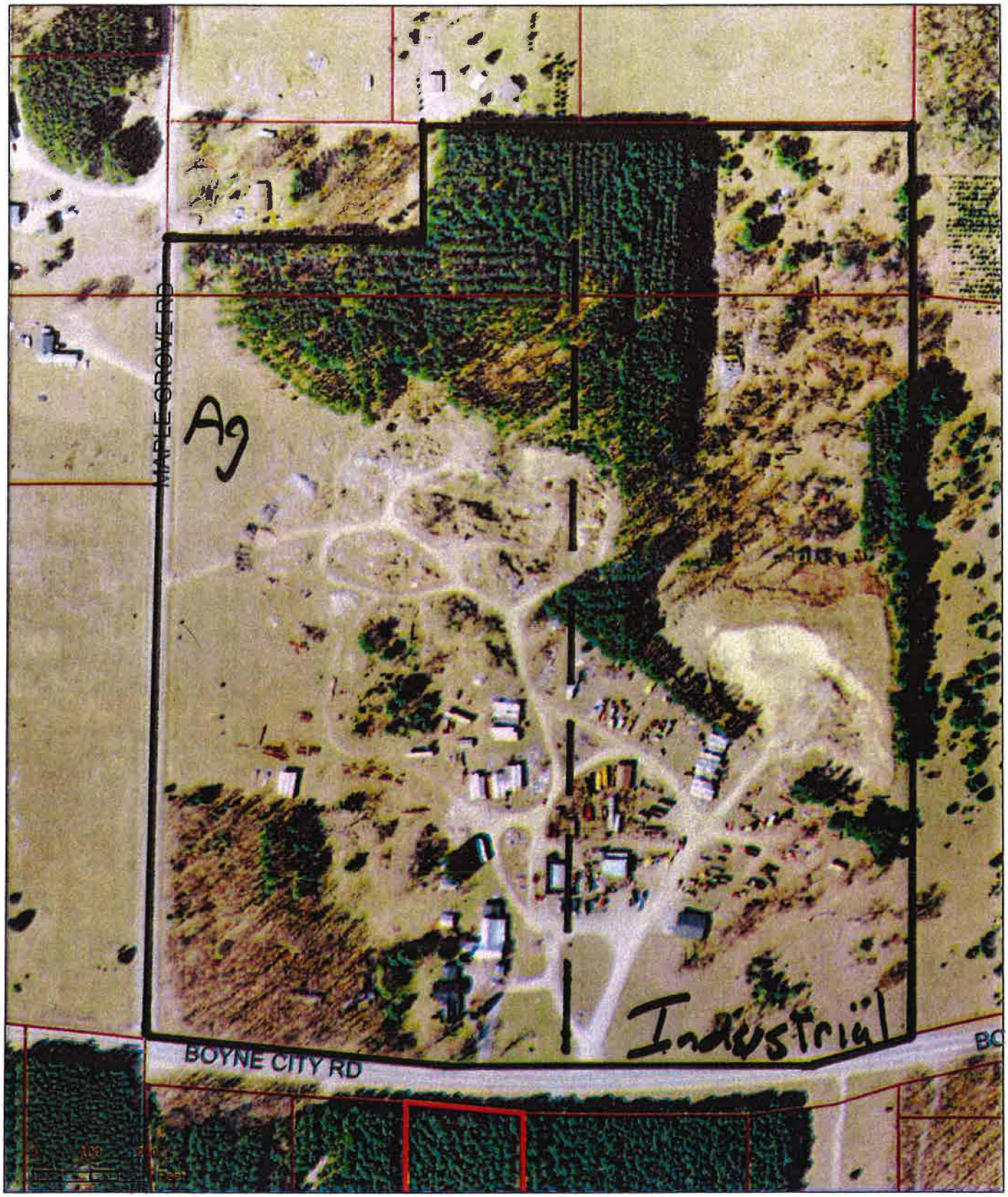

——— Property Boundary

— — — Zoning Boundary (Approx.)